Kobe University Repository : Kernel

PDF issue: 2026-11-26

Strategic Trade Liberalization under Hegemonic Decline

Ishiguro, Kaoru

(Citation)
Kobe University Economic Review,51:35-55

(Issue Date)
2005

(Resource Type)
departmental bulletin paper

(Version)
Version of Record

(JaLCDOI)
https://doi.org/10.24546/00422141

(URL)
https://hdl.handle.net/20.500.14094/00422141

KOBE UNIVERSITY

STRATEGIC TRADE LIBERALIZATION UNDER HEGEMONIC DECLINE

By KAORU ISHIGURO

The purpose of this paper is to explain trade liberalization policies that a hegemon adopts to maintain a free trade system in a hegemonic declining age from a viewpoint of asymmetric information and trade power by using a simple game theory. A main finding of this paper is that even in a hegemonic declining age when a hegemon can no longer firmly commit itself to maintaining a free trade system, the hegemon and non-hegemon still open their markets allowing the free trade system to be maintained, if the hegemon has a sufficient reputation for its trade liberalization policies.

1. Introduction

Kindleberger (1973), Gilpin (1975) and Krasner (1976) present a theory of hegemonic stability, which is about the stability of an international economic order. According to the theory, establishing and maintaining a stable free trade system requires a hegemon that has strong power and power bases and is capable of displaying leadership for trade liberalization. In a hegemonic declining age, when a hegemon's power bases relatively decline and make it increasingly difficult for the hegemon to display its leadership, the free trade system would be unstabilized.

Reviewing the theory of hegemonic stability, Keohane (1984) claims, in the theory of international regime, that a free trade system would be maintained even in a hegemonic declining age. According to Keohane, if an international regime of trade liberalization established by the hegemon works effectively, the free trade system could remain stable even in a hegemonic declining age under international cooperation. However, he does not explain the conditions under which the international regime works effectively.

The purpose of this paper is to explain trade liberalization policies adopted by the hegemon to maintain a free trade system in a hegemonic declining age from a viewpoint of asymmetric information and trade power by using a simple game theory. There are two types of hegemons. One is an outward-looking hegemon that displays leadership for trade liberalization. The other is an inward-looking hegemon that does not have such leadership. There is asymmetric information about the type of hegemon; the hegemon has private information for its true type, while a non-hegemon does not. Under such asymmetric information, we analyze the hegemon's trade liberalization policies and explain the conditions that allow the international regime of trade liberalization to work effectively.

A main finding of this paper is that even in a hegemonic declining age when the hegemon cannot firmly commit itself to keeping the free trade system, if the hegemon has sufficiently established reputation for its trade liberalization policies, the hegemon and the non-hegemon open their markets and the free trade system would be maintained. We here define the

hegemon's reputation as credibility of the hegemon's trade liberalization policies built based on its past achievements (Alt, Calvert and Humes, 1988).

The finding is different from the proposition of the theory of hegemonic stability presented by Kindleberger and others. The theory of hegemonic stability insists that in a hegemonic declining age when the hegemon can no longer display the leadership, the free trade system would collapse. This paper, however, considers a dynamic game and asymmetric information between the hegemon and the non-hegemon, which is not analyzed in the theory of hegemonic stability, and further clarifies the conditions under which the free trade system would be maintained even in a hegemonic declining age. In complete information and one-shot game, if the hegemon behaves inward-lookingly in a hegemonic declining age, the free trade system would collapse. With incomplete information and repeated games, however, the effectiveness of trade liberalization policies in a hegemonic declining age depends on the hegemon's reputation.

Our finding is also different from the views presented by Brander and Spencer, and others in the theory of strategic trade policy (Spencer and Bander, 1983; Brander and Spencer, 1985; Krugman, 1984, 1990; Helpman and Krugman, 1989; Laussel and Montet, 1994). Strategic trade policies are adopted to improve the welfare of a domestic economy in a situation where conditions of perfect competition are not met owing to economies of scale and external economies (Krugman, 1984). Since the study of Brander and Spencer, the theory of strategic trade policy has been a main topic of trade policy debates and then provided a theoretical base for the Clinton Administration's trade policies. The theory is apt to approve trade protection with active governmental intervention rather than free trade. Brander and Spencer (1985), for example, explain that the welfare of a domestic economy is improved by export subsidies. In short, a contribution of the theory of strategic trade policy is that it proves that free trade is not always optimal (Krugman, 1990).

We, however, explain the conditions for free trade to be optimal by considering a dynamic game undiscussed by Brander and Spencer, while it is fundamentally based on the same trade theory in imperfect competition as used in their works.[1)] An adoption of strategic trade policies is likely to trigger trade wars by inviting trade partner's retaliations, while it may temporarily increase the welfare of the domestic economy (Conybeare, 1984, 1988). In repeated games, the strategic trade policies do not always improve own economic welfare. Under the framework of dynamic games, the implication of strategic trade policy is reversed. That is, protectionist policies are not always optimal.

Furthermore, our finding is different from the views of Bhagwati and Patric (1990) concerning unilateralism and result-oriented trade policies. Unilateralism or result-oriented trade policy as best exemplified by Super 301 characterizes the trend in the recent U.S. trade policy along with the strategic trade policy. These trade policies are often criticized by those in the position to support the GATT=WTO system. However, if its fundamental nature is

1) Krugman (1990:252-53) points out a way to extend Brander and Spencer model, which is to consider two additional factors in the game; a game between a government and firms, and retaliation by other countries.

reciprocity, the unilateralism or result-oriented trade policy is not always inconsistent with the free trade system. Reciprocity here means deciding a nation's trade policy depending on the partner's trade policy. We explain that a free trade system can be maintained through a reciprocal approach taken by the hegemon.

This paper is organized as follows. Section 2 sets up a trade liberalization model under hegemonic cooperation characterized by the trade theory in imperfect competition and repeated games with incomplete information. In Section 3, a sequential equilibrium with dynamic consistency is defined. Section 4 explains the conditions for a free trade system to stabilize by using specific payoff functions with a numerical example. Finally, Section 5 summarizes the conclusions.

2. The Model of Trade Liberalization Game

2.1 The Framework of the Model

Let us construct a model of trade liberalization under hegemonic cooperation. One feature of the model is that the same trade theory in imperfect competition as used in Spencer and Bander (1983), Brander and Spencer (1985), Krugman (1984, 1990), Cronshaw and Markusen (1995) is applied to specify a payoff function. Furthermore, a finitely repeated game with incomplete information developed by Kreps and Wilson (1982a, 1982b) is used to construct a game setting. In this paper, we will also consider such issues as importance of ideology, domestic factors, role of market and technological development, which are identified by Gilpin (1987:91) as the problems of the theory of hegemonic stability.[2)]

Players: The main players of the game are a hegemon (*H*) and a non-hegemon (*N*). The non-hegemon is one of the main players.[3)] The hegemon's leadership is a necessary condition, but not sufficient for a free trade system. The free trade system is kept under cooperation between the hegemon and the non-hegemon. In this sense, the hegemonic theory of this paper is differentiated from the existing theories and can be called as a theory of hegemonic cooperation, meaning international cooperation under hegemony (Keohane, 1984, Yarbrough and Yarbrough, 1992). In this model, consumers and firms are not supposed to play strategically against governments.

The hegemon, which takes a superior position to the non-hegemon in its will and ability to liberalize a trade and holding of information, is generally characterized by its predominance over the non-hegemon in trade power. Here, its predominance in trade power is translated into a strategy of reciprocity, meaning the hegemon can decide a trade policy considering the trade policy decision made by the non-hegemon. In a hegemonic declining age, the predominance of its trade power, for example, is maintained by Super 301.

---

2) See, for example, Keohane (1984), Snidal (1985), Lake (1988) and Gowa (1994) besides Gilpin (1987) for critical analyses of the theory of hegemonic stability.

3) Eichengreen (1989) points out that a problem of the theory of hegemonic stability is the discounted role of the non-hegemon.

Player's Action: Policy variables of the hegemon and the non-hegemon are non-tariff barriers.[4] Action space of each country comprises only two factors; cooperation (c) or opening its market completely, and defection (D) or setting prohibitive non-tariff barriers. If the hegemon opens its own market in compliance with the international regime of trade liberalization prompting the non-hegemon to cooperate with the hegemon and open its market as well, the free trade system would stabilize. If that were not the case, the free trade system would collapse. Consumers and firms optimize their actions under the framework of trade policies set by each country.

Hegemon's Types: There are two types of hegemon. One is an outward-looking hegemon (H_s) that displays leadership for trade liberalization and always commits itself to keeping the free trade system. The other is an inward-looking hegemon (H_w) without such leadership facing relative decline of its economic predominance. The outward-looking hegemon always opens its market in compliance with the international regime of trade liberalization. On the other hand, the inward-looking hegemon chooses a trade strategy to maximize its expected present value of payoff.

It is possible to think the two types of hegemons represent different political stances. For instance, in the case of U. S., the Department of State is outward-looking and prefers a stable world order to domestic economic interests, while the Department of Commerce and the USTR are inward-looking and try to protect domestic economic interests. The trade policies in the United States would be decided based on such differences of political stance and power relations among the different government offices concerned (Cohen, 1994).

Information Structure: There is asymmetric information for a type of hegemon in the sense that the hegemon has private information for its true type while the non-hegemon does not. The non-hegemon infers the hegemon's type from the trade policies taken by the hegemon. The non-hegemon's subjective probability at date 0 that the hegemon is outward-looking is expressed by probability distribution (θ_0, $1-\theta_0$). θ_0 is the hegemon's reputation and also stands as an indicator to express the non-hegemon's acceptance level of liberal ideology and norms of free trade under the international regime of trade liberalization.[5]

The hegemon's reputation θ_t at the beginning of period t follows from the Bayes' rule. The hegemon's actions at date t are either to open or not to open the market. Let σ_t be the probability that the inward-looking hegemon opens the market, conditional on having opened the market in all the previous periods. The case in which the hegemon opens the market is either that it is outward-looking (probability θ_t) or that although it is inward-looking (probability $1-\theta_t$), it masquerades as an outward-looking hegemon (conditional probability σ_t). Here, the hegemon's actions in the area of trade policies are sufficient statistics for the

4) See, for example, Jensen and Thursby (1990), Riezman (1991) and Stahl, and Turunen-Red (1995) for analyses of tariff as a policy variable using a repeated game.

5) The problem of ideology, which is disregarded in the theory of hegemonic stability, can be handled by using the non-hegemon's subjective probability or the hegemon's reputation. For example, if liberal ideology works effectively, the hegemon's reputation of trade liberalization policy is enhanced and the free trade system is kept stable. In the reversed situation, the reputation is degraded and the system is unstabilized. See Goldstein (1988) for rationalized process of liberal ideology in the field of external policy.

hegemon's type. Therefore, if $\theta_t + (1-\theta_t)\,\sigma_t \neq 0$, the hegemon's reputation θ_{t+1} at date t+1 is obtained as follows:

$$\theta_{t+1} = \theta_t / [\theta_t + (1-\theta_t)\sigma_t]. \quad (1)$$

For $0 < \theta_t < 1$ and $0 \leqq \sigma_t < 1$, if the hegemon opens the market, the non-hegemon's subjective probability increases. For the inward-looking hegemon, this learning process of the non-hegemon is building process of integrated power or reputation that the hegemon is outward-looking. The hegemon in a long-term perspective invests in such power building.

Extension of the Game: It is assumed that in an age of hegemonic stability a free trade system had been maintained. In an age of hegemonic decline, the game has two stages (See FIGURE 1). The first stage is a policy game between the hegemon and the non-hegemon. The second stage is an economic game among private economic actors. In the first stage, the game has the first mover and the second mover. The game goes as follows: at the beginning of the first stage, a rule of trade liberalization is revealed to the hegemon and the non-hegemon under the international regime of free trade system such as GATT=WTO. Then, the non-hegemon decides whether to accept the rule of trade liberalization and open the market or not. After learning the action decided by the non-hegemon, the hegemon decides whether to open the market (strategy of reciprocity). After the first stage is over where each country decides the trade policy, the second stage gets started where consumers and firms of respective nations optimize their actions. This game has a finite horizon T (the value T is common knowledge).

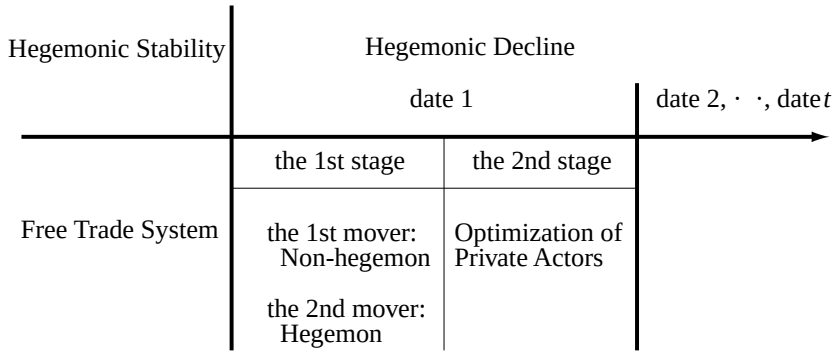

FIGURE 1. Timeline of the Game

2.2 Political Objectives

Economic Equilibrium: We will consider political objectives or payoff functions of the hegemon and the non-hegemon. We analyze them on the base of the trade theory in imperfect competition. The hegemon and the non-hegemon produce two homogeneous tradable goods, x

and y with a fixed supply of labor (L). The good y is produced with constant returns to scale by competitive industries in each country. The units of y are chosen such as $y = L_y$. There is a single firm producing the good x in each country.

The good x is produced with a constant marginal cost in units of labor, denoted c_H and c_N for the hegemon's and non-hegemon's firms respectively. To distinguish the costs of serving different markets, we will use the notation c_{ij}, $i,j = \{H, N\}$, which is the cost to firm i of serving market j.[6)]

Utility function u_i, $i = \{H, N\}$, and budget constraints in country i are given by (2). C_{xi} and C_{yi} denote the consumption of goods x and y in country i respectively. A representative consumer in each country maximizes the function u_i subject to the budget constraint that a sum of income derived from labor services L_i and profits of the country's firm π_i equals consumption expenditures. L (or y) is chosen as numeraire and p_i denotes the price of x in terms of L in country i.

$$\underset{C_{xi},\, C_{yi}}{\text{Max}}\ u_i = aC_{xi}-(b/2)C_{xi}^2+C_{yi},\ a,b>0, \quad \text{s.t. } L_i+\pi_i = p_iC_{xi}+C_{yi}. \tag{2}$$

The first order condition for utility maximization gives a linear inverse demand function in country i: $p_i = a-bC_{xi}$. If $a/b > C_{xi}$, $p_i > 0$, while if $a/b \leqq C_{xi}$, $p_i = 0$.

We assume that the x firms are able to segment markets, so we can consider the hegemon's and non-hegemon's markets separately. Let x_{Hi} and x_{Ni} denote the supplies of the hegemon's and non-hegemon's firms to market i respectively, so we get $C_{xi} = x_{Hi} + x_{Ni}$. The respective profits of firm j in country i are given by $\pi_{ji} = p_ix_{ji}-c_{ji}x_{ji}$. Let us assume each firm operates under Cournot conjectures, maximizing profits for a given output of the other firm. From the first order conditions, the optimal supplies of the two firms to country i are $x_{Hi} = [a-(2c_{Hi}-c_{Ni})]/3b$, $x_{Ni} = [a-(2c_{Ni}-c_{Hi})]/3b$. Using x_{Hi} and x_{Ni}, we obtain firm j's profits in country i; $\pi_{ji} = b(x_{ji})^2$.

Payoff Functions and Non-tariff Barriers: Based on the economic model,[7)] we assume that political objectives or payoff functions of the hegemon U_H and the non-hegemon U_N are given by

$$\begin{cases} U_H = (b/2)(x_{HH} + x_{NH})^2 + b(x_{HH})^2 + b(x_{HN})^2-\mu, \\ U_N = (b/2)(x_{NN} + x_{HN})^2 + b(x_{NN})^2 + b(x_{NH})^2-\eta. \end{cases} \tag{3}$$

In the right hand of (3), the first term is consumer surplus and the second and third terms are

6) The problem of technological development, which Gilpin (1987) points out, will be explicitly handled by using production technologies and costs of serving the market. For example, in a hegemonic declining age the relative decline of hegemon's economic predominance is treated by the non-hegemon's improved competitiveness or catch-up of technology.

7) Utility functions of each country under free trade are rewritten: $u_H = (b/2)(x_{HH}+x_{NH})^2 +b(x_{HH})^2 +b(x_{HN})^2 +L_H$, $u_N = (b/2)(x_{NN}+x_{HN})^2+b(x_{NN})^2 +b(x_{NH})^2+L_N$. Although we suppose that each country i has labor supply large enough to produce goods x, we ignore L_i to simplify payoff functions.

firm's profits. The fourth terms μ and η denote the political costs for the hegemon and the non-hegemon respectively of closing the markets under the international regime of trade liberalization. The political costs for each country of closing the markets are assumed to be increasing functions of non-tariff barriers: $\partial\mu/\partial c_{NH} > 0$, $\partial\eta/\partial c_{HN} > 0$. The costs of non-tariff barriers are expressed by c_{NH} and c_{HN}, which are the costs for each firm of serving exporting markets.

Domestic elements, role of market, and technological development, that are disregarded in the theory of hegemonic stability (Gilpin, 1987), are handled explicitly by analyzing each country's payoff function. By considering explicitly consumers and firms, we can respond to the criticism against international system analyses, such as the theory of hegemonic stability that domestic social preferences are not sufficiently discussed in them. In this model, for example, increased non-tariff barriers decrease consumer surplus and increase firm's profit. Therefore, consumers prefer free trade, while firms prefer trade protection.[8)]

The non-tariff barriers are additional costs dissipated in directly unproductive activities, and they increase costs for each firm to serve the exporting market. While tariffs are revenues for the import country, the non-tariff barriers are not. Under the assumption of a separated market, the increased non-tariff barrier in the home country does not affect the serving costs in the foreign market.

The effects of increased non-tariff barriers on each firm's supply (profit) and each country's consumption are as follows. The increased non-tariff barrier leads to a decrease in the exports of the foreign firm to the domestic market: $\partial x_{HN}/\partial c_{HN}=\partial x_{NH}/\partial c_{NH} = -2/3b$, and, on the other hand, increases supplies of the domestic firm to the domestic market: $\partial x_{NN}/\partial c_{HN} =\partial x_{HH}/\partial c_{NH} = 1/3b$. Moreover, it lets the consumption decline in the home country: $\partial C_{xN}/\partial c_{HN}=\partial C_{xH}/\partial c_{NH}=-1/3b$.

The effects of the increased non-tariff barrier on the payoff in each country are classified in to three cases: first, a home country raises non-tariff barriers one-sidedly ($\partial U_i/\partial c_{ji}$); second, a foreign country raises non-tariff barriers one-sidedly ($\partial U_i/\partial c_{ij}$); and third, the two countries raise non-tariff barriers simultaneously ($\partial U_i/\partial c_{ji} + \partial U_i/\partial c_{ij}$).

First, the one-sided increases of non-tariff barriers of a home country may improve the payoff of the country or may deteriorate it. The effects of increased non-tariff barriers on economic welfare u_i depend on whether the domestic firm has a competitive advantage at home or not. The increased non-tariff barrier in the home country increases the foreign firm's exporting costs and improves the economic welfare at home u_i, if the domestic firm has a competitive advantage at home ($c_{NN} < c_{HN}$, $c_{HH} < c_{NH}$). Although the increase in non-tariff barrier decreases consumer surplus at home, it shifts profits toward the domestic firm. The first effect dominates if the foreign firm has the competitive advantage, while the profit-shifting effect dominates if the home firm has the competitive advantage. Therefore, it is optimal to exclude the foreign firm completely and it improves the home country's economic welfare u_i if, under free trade, the domestic firm has the competitive advantage in the home market. Note,

8) See, for example, Mansfield and Busch (1995) for an analysis of non-tariff barriers.

however, that the increase in non-tariff barriers also causes a rise in the political costs. Depending on combinations of effects on the economic welfare and the political costs, the effects of the increase in non-tariff barriers on the payoff U_i have three outcomes (See, Appendix (A-1)).

Second, the one-sided increase of non-tariff barriers in the foreign country aggravates the home payoff, since profits of the home firm in the foreign country decreased: $\partial U_H / \partial c_{HN} = -4(a - 2c_{HN} + c_{NN}) / 9b < 0$, $\partial U_N / \partial c_{NH} = -4(a - 2c_{NH} + c_{HH}) / 9b < 0$. This result does not depend on the home firm's competitive advantage.

Third, these results lead us to believe that there are two possible cases regarding the effects on each country's payoff when both countries increase non-tariff barriers. The increased non-tariff barriers in both countries increase the foreign firm's exporting costs, deteriorate the economic welfare at home u_i, and decrease the payoff U_i in each country, if the domestic firm does not have a competitive advantage at home ($c_{NN} > c_{HN}$, $c_{HH} > c_{NH}$). However, if the home firm has the competitive advantage, depending on combinations of effects on the economic welfare and the political costs, the effects of the increase in non-tariff barrier on the payoff U_i have two outcomes. If the political costs a country has to pay for increasing non-tariff barrier must be sufficiently small, it improves the payoff. On the other hand, if the political costs must be sufficiently large, even if the home firm has the competitive advantage, it aggravates the payoff (See, Appendix (A-3) and (A-4)).

2.3 Characteristics of Hegemonic Decline

We specify each country's payoff functions in a hegemonic declining age. TABLE 1 shows each country's payoff under different combinations of the trade policies of the hegemon and non-hegemon.

We assume the characteristics of hegemonic decline as follows. First, we will consider the political costs of the two types of hegemons in a hegemonic declining age. The inward-looking hegemon (H_w) cannot commit itself to keeping a free trade system due to the relative decline of its economic advantage, and neither can it display the political leadership for trade liberalization. Then the political costs for the inward-looking hegemon to increase non-tariff barriers must be sufficiently small. On the other hand, the outward-looking hegemon (H_s) will commit itself to keeping a free trade system even in its economic declining and will continue to display political leadership for trade liberalization. Then the political costs it has to pay for increasing non-tariff barriers must be sufficiently large.

TABLE 1. Payoff Matrix

		Non hegemon	
		c	*D*
Hegemon	*c*	(U_{Hcc}, U_{Ncc})	(U_{HcD}, U_{NcD})
	D	(U_{HDc}, U_{NDc})	(U_{HDD}, U_{NDD})

Second, the hegemon's economic advantage declines relatively as the non-hegemon increases its competitiveness or achieves technological catch up. The hegemon's firm loses competitiveness in the non-hegemon's market ($c_{HN} > c_{NN}$), even if it maintains a competitive advantage in the domestic market ($c_{HH} < c_{NH}$). Economically the hegemon is expected to have an incentive to close the market in this case. The non-hegemon, too, has an incentive to close its market from an economic viewpoint.[9)]

On the other hand, a characteristic of hegemonic establishment is explained as follows. In an era of hegemonic establishment, the hegemon has an economic advantage and shows strong leadership in liberalizing trade. The hegemon's firm has competitive advantages in both the domestic and foreign markets ($c_{HH} < c_{NH}$, $c_{HN} < c_{NN}$). While the hegemon has an economic incentive to close its own market under the competitive advantages, it displays politically strong leadership to open the market ($\partial\mu/\partial c_{NH}$ is sufficiently large). The non-hegemon prefers trade protection to seeking economic independence in the long run, while it may benefit from opening its market in the short run.

Using those assumptions, we obtain the following payoff relations in a hegemonic declining age. For the inward-looking hegemon, closing the market is the dominant strategy. We assume the following relations regarding the payoff of the inward-looking hegemon U_{Hw}.

$$U_{HwDc} > U_{Hwcc}, \quad U_{HwDD} > U_{HwcD}. \tag{4}$$

9) A crude theory of hegemonic stability insists there is a strong relationship between the hegemon's economic power and a stability of free trade system. That is, the hegemon's sufficiently competitive advantage realizes a stable free trade system, while the decline of this advantage lets the free trade system collapse. The reason is that the hegemon with a competitive advantage prefers free trade, while the hegemon with declining competitiveness prefers trade protection. However, the argument is too simple and is not always true. Rather, the hegemon with a competitive advantage has an incentive to close the market, as it would increase the firm's profit and improve the welfare. It needs a non-economic factor, for example, political incentive to liberalize trade, for the hegemon to open the market. Furthermore, the hegemon with declining economic power does not always prefer trade protection, because opening the market increases consumer surplus and improves the welfare. The same argument is also applied to the case of tariff as a policy variable. A large country can improve the welfare through an optimal tariff rather than free trade. Conybeare (1984) criticizes the theory of hegemonic stability from this viewpoint.

For the outward-looking hegemon, opening its market is the dominant strategy.[10] We assume the following relations concerning the payoff of the outward-looking hegemon U_{Hs}.

$$U_{Hscc} > U_{HsDc}, \quad U_{HscD} > U_{HsDD}. \tag{5}$$

Moreover, it is assumed that in a hegemonic declining age the non-hegemon opens its market if the hegemon displays the leadership for trade liberalization, while it closes the market if such leadership is not displayed by the hegemon. The payoff relations of the non-hegemon can be written as follows:

$$U_{Ncc} > U_{NcD}, \quad U_{NDD} > U_{NDc}. \tag{6}$$

Here, the behavior pattern of the non-hegemon is similar to the reactive state given by Calder (1988).

3. Equilibrium of Trade Liberalization Game

We consider equilibrium of the trade liberalization game. Our finitely repeated game with incomplete information is fundamentally the same as Kreps and Wilson (1982a, 1982b). The equilibrium of the model is sequential one, which solutions are dynamically consistent and can be obtained backward recursively.

As the outward-looking hegemon is always committed to trade liberalization, we will consider the actions taken by the inward-looking hegemon and the non-hegemon. The value function, $V_H(t,\theta_t)$, is defined as the maximized expected present value of the inward-looking hegemon's payoff from date t onward, $\Pi_H(t,\theta_t)$, conditional on having opened the market in all the previous periods.

$$V_H(t,\theta_t) = \underset{\sigma_t}{\text{Max}}\ \Pi_H(t,\theta_t). \tag{7}$$

The expected present value of payoff from date t onward, $\Pi_H(t,\theta_t)$, equals the sum of the expected payoff for period t, $E[U_{Hwt}]$, and the expected present value of payoff from date t+1 onward, $\Pi_H(t+1,\theta_{t+1})$. If the hegemon opens the market at date t with probability σ_t , it gets the amount of reputation θ_{t+1} at date t+1. Then, the maximized expected value of payoff at date t+1 is $V_H(t+1,\theta_{t+1})$. If it does not open the market at date t with probability $1-\sigma_t$, it loses the reputation from the next period onward (θ_{t+1}, θ_{t+2}, , =0), because the outward-looking hegemon always opens its market. If the hegemon does not open the market at date t, its payoff for each period from date t+1 is U_{HwDD}. Then the present value of the sum of the hegemon's payoff

10) They say that under the foreign trade policies of the United States during the Cold War U.S. markets were opened to accommodate the Western alliance or liberal economies while sacrificing its own national economic interests.

from date t+1 to date T is (T-t) U_{HwDD} if δ_H=1, where δ_H is the exogenous and constant real discount factor for the hegemon.[11] Therefore, the expected present value of the hegemon's payoff from date t onward, $\Pi_H(t,\theta_t)$, is

$$\Pi_H(t,\theta_t) = E[U_{Hwt}] + \sigma_t V_H(t+1,\theta_{t+1}) + (1-\sigma_t)(T-t)U_{HwDD}, \tag{8}$$

for $1 \leqq t \leqq T$-1, where

$$E[U_{Hwt}] = \rho_t[\sigma_t U_{Hwcc} + (1-\sigma_t)U_{HwDc}] + (1-\rho_t)[\sigma_t U_{HwcD} + (1-\sigma_t)U_{HwDD}], \tag{9}$$

where ρ_t is the probability for the non-hegemon to open its own market at date t.

Similarly the value function, $V_N(t,\theta_t)$, is defined as the maximized expected present value of the non-hegemon's payoff from date t onward, $\Pi_N(t,\theta_t)$, and can be written as:

$$V_N(t,\theta_t) = \underset{\rho_t}{\text{Max}}\ \Pi_N(t,\theta_t). \tag{10}$$

The expected present value of the non-hegemon's payoff from date t onward, $\Pi_N(t,\theta_t)$, equals the sum of the expected payoff for period t, $E[U_{Nt}]$, and the expected present value of payoff from date t+1 onward, $\Pi_N(t+1,\theta_{t+1})$. If the hegemon opens the market at date t , the maximized expected value of the non-hegemon's payoff at date t+1 onward is $V_N(t+1,\theta_{t+1})$. If the hegemon does not open the market, the non-hegemon's payoff for each period from date t+1 is U_{NDD}. Then the present value of the non-hegemon's payoff from date t+1 to final date T is $(T-t)U_{NDD}$ if δ_N =1, where δ_N is the exogenous and constant real discount factor for the non-hegemon.[12] Therefore, the expected present value of the non-hegemon's payoff from date t onward, $\Pi_N(t,\theta_t)$, is

$$\Pi_N(t,\theta_t) = E[U_{Nt}] + \tau_t V_N(t+1,\theta_{t+1}) + (1-\theta_t)(1-\sigma_t)(T-t)U_{NDD}, \tag{11}$$

for $1 \leqq t \leqq T$-1, where

$$E[U_{Nt}] = \tau_t[\rho_t U_{Ncc} + (1-\rho_t)U_{NcD}] + (1-\theta_t)(1-\sigma_t)[\rho_t U_{NDc} + (1-\rho_t)U_{NDD}], \tag{12}$$

$$\tau_t = \theta_t + (1-\theta_t)\sigma_t \tag{13}$$

where τ_t is the probability for the hegemon to open the market at date t.

Substituting (9) into (8) and (12) into (11) respectively and arranging the equations, we obtain the sequential equilibrium (σ_t^*, ρ_t^*, θ_t) of the trade liberalization game as below. Note that τ_t is given by (13), and δ_H=1 and δ_N=1.

11) It is $[\delta_H/(1-\delta_H)](1-\delta_H^{T-t})U_{HwDD}$, if $\delta_H \neq 1$.
12) It is $[\delta_N/(1-\delta_N)](1-\delta_N^{T-t})U_{NDD}$, if $\delta_N \neq 1$.

$$\sigma_t^* = \arg\max \{V_H(t+1,\theta_t+1) + \rho_t (U_{Hwcc}-U_{HwDc}) + (1-\rho_t) (U_{HwcD}-U_{HwDD}) - (T-t)U_{HwDD}\}\sigma_t + (T-t+1)U_{HwDD} + \rho_t (U_{HwDc}-U_{HwDD}), \quad (14)$$

$$\rho_t^* = \arg\max \{[(U_{Ncc}-U_{NcD})-(U_{NDc}-U_{NDD})]\tau_t + (U_{NDc}-U_{NDD})\}\rho_t + [U_{NcD} - (T-t+1)U_{NDD}]\tau_t + (T-t+1)U_{NDD} + \tau_t V_N(t+1,\theta_{t+1}), \quad (15)$$

$$\theta_t = \theta_{t-1} / [\theta_{t-1} + (1-\theta_{t-1})\sigma^*_{t-1}], \quad \text{if } \theta_{t-1} + (1-\theta_{t-1})\sigma^*_{t-1} \neq 0. \quad (1)'$$

4. Conditions of Trade Liberalization: A Numerical Example

In this section, we will specify the payoff functions of the hegemon and the non-hegemon and consider the necessary conditions for the free trade system to be maintained in a hegemonic declining age.

A Numerical Example: There is asymmetry of information between the hegemon and the non-hegemon: the hegemon knows the true value μ of the hegemon's political leadership or political costs for closing the market, while it is a random variable for the non-hegemon. The true value of μ is either μ_w (for the inward-looking hegemon) or μ_s (for the outward-looking hegemon), and $\mu_w<\mu_s$. The non-hegemon at date t infers the true value to be μ_s with probability θ_t and μ_w with probability $(1-\theta_t)$. The values of the other parameters are common knowledge.

Here, let us take a simple numerical example as follows. We assume $a = 10$, $b = 1$, $c_{HH} = 2$, $c_{HN} = 3$, $c_{NN} = 2$, $c_{NH} = 3$, $\mu_w = 0$ and $\mu_s = 3$. As for the value of political costs η for the non-hegemon of closing the market, $\eta = 3$ if the hegemon displays the leadership and opens the market, while $\eta = 2$ if the hegemon does not show such leadership. The assumption is indicative of the non-hegemon's characteristic of being the reactive state that tends to decide its own policy attitudes depending on the hegemon's leadership. The payoffs of the inward-looking hegemon, the outward-looking hegemon and the non-hegemon respectively are calculated as follows: $U_{Hwcc} = 25.5$, $U_{HwcD} = 21.5$, $U_{HwDc} = 28$, $U_{HwDD} = 24$, $U_{Hscc} = 25.5$, $U_{HscD} = 21.5$, $U_{HsDc} = 25$, $H_{HsDD} = 21$, $U_{Ncc} = 25.5$, $U_{NcD} = 25$, $U_{NDc} = 21.5$, $U_{NDD} = 22$.

Let us consider the case of one-shot game with complete information. If the hegemon is outward-looking, the strategy (c, c) is a subgame-perfect Nash equilibrium enabling the free trade system to stabilize. On the other hand, if the hegemon is inward-looking, it is the combination (D, D) that shows a subgame-perfect Nash equilibrium, under which the free trade system would collapse. This is what is asserted by Kindleberger and others in the theory of hegemonic stability. For the free trade system to stabilize we need a hegemon that can commit itself to the international regime of trade liberalization. Without such a hegemon's commitment, the free trade system would collapse. Furthermore, according to the strategic trade theory, the inward-looking hegemon can improve the domestic welfare by increasing the non-tariff barriers as long as the trade partner keeps its market open.

Our main concern is the case of a finitely repeated game with incomplete information under

which only the hegemon knows which type it is categorized into; inward-looking or outward-looking. In this case, we get the conclusion opposite to what the theory of hegemonic stability presents. That is, it is possible for even the inward-looking hegemon, which cannot commit itself to the free trade system in a hegemonic declining age, to display leadership to liberalize trade and allow the free trade system to be maintained. The conclusion is also different from what the strategic trade theory insists.

Strategy at Date t: We will consider the sequential equilibrium of a trade liberalization game by inferring backward recursively from the terminal date *T*. Note that $\delta_N = \delta_H = 1$ below.

FIGURE 2 illustrates an extensive-form of the game at date *T*. I_{Hi} (i = 1, , 4) and I_N denote information sets of the hegemon and non-hegemon respectively. The dotted line indicates that the factors belong to the same set. In FIGURE 2 the second stage of the game is not described.

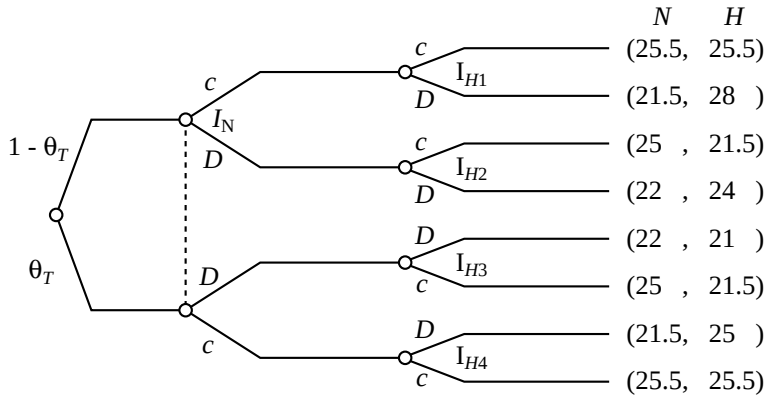

FIGURE 2. Extensive-form of the Game

The outward-looking hegemon (H_s) continues to display the leadership and to keep the market open at the terminal date *T*. On the other hand, the inward-looking hegemon (H_w) decides to take the optimal action without considering the subsequent reputation it would get and then closes the market, letting the free trade system collapse.

The non-hegemon opts for the strategy, ρ_T^*, to maximize the expected payoff at date *T*, $\Pi_N(T,\theta_T)$.

$$\rho_T^* = \arg\max\ [\theta_T - (1/2)]\rho_T + 3\theta_T + 22. \tag{16}$$

Following Kreps and Wilson (1982a) we assume that $\rho_T^* = 5/8$ if $\theta_T = 1/2$, although $0 \leqq \rho_T^* \leqq 1$ if $\theta_T = 1/2$. Then the non-hegemon's strategy, ρ_T^*, is as follows: $\rho_T^* = 1$ if $\theta_T > 1/2$, $\rho_T^* = 5/8$ if $\theta_T = 1/2$, and $\rho_T^* = 0$ if $\theta_T < 1/2$. Therefore, if the hegemon managed to maintain its reputation for trade liberalization policies at a sufficiently high level ($\theta_T > 1/2$) until the terminal date *T*, even if it is inward-looking, the non-hegemon cooperates with the hegemon in

keeping the free trade system by opening its market ($\rho_T^* = 1$) .

The hegemon and non-hegemon decide the strategies σ^*_t and ρ^*_t respectively to maximize their respective expected present payoff from date t ($1 \leqq t \leqq T\text{-}1$) onward. Substituting their respective payoff into (14) and (15) yields

$$\sigma_t^* = \arg\max\, [V_H(t+1,\theta_{t+1}) - 2.5 + 24(T\text{-}t)]\sigma_t + 4\rho_t + 24(T\text{-}t+1), \tag{17}$$

$$\rho_t^* = \arg\max\, [\tau_t\text{-}(1/2)]\rho_t + [3\text{-}22(T\text{-}t)]\tau_t + 22(T\text{-}t+1) + \tau_t V_N(t+1,\theta_{t+1}), \tag{18}$$

where $\tau_t = \theta_t + (1\text{-}\theta_t)\sigma_t^*$. If $\theta_t + (1\text{-}\theta_t)\sigma_t^* \neq 0$, the hegemon's reputation for its trade liberalization policies at date t, θ_t, is determined by (1)'.

The sequential equilibrium (σ_t^*, ρ_t^*, θ_t) of the trade liberalization game is summarized as follows (See Appendix). The inward-looking hegemon opens the market at date t with the following probability σ_t^*:

$$\sigma_t^* = \begin{cases} 1, & \text{if } \theta_t > (1/2)^{T-t}, \\ [(1/2)\text{-}(1/2)^{T-t+1}]/[1\text{-}(1/2)^{T-t+1}], & \text{if } 0 < \theta_t \leqq (1/2)^{T-t}, \\ 0, & \text{if } \theta_t = 0. \end{cases} \tag{19}$$

The non-hegemon opens the market at date t with the following probability ρ_t^*:

$$\rho_t^* = \begin{cases} 1, & \text{if } \theta_t > (1/2)^{T-t+1}, \\ 5/8, & \text{if } \theta_t = (1/2)^{T-t+1}, \\ 0, & \text{if } \theta_t < (1/2)^{T-t+1}. \end{cases} \tag{20}$$

The hegemon's reputation for its trade liberalization policies at date t, θ_t, is

$$\theta_t = \begin{cases} (1/2)^{T-t+1} & \text{if } c_{NHt-1} = 3, \\ 0, & \text{if } c_{NHt-1} \neq 3, \text{ or } \theta_{t-1} = 0. \end{cases} \tag{21}$$

Proposition: From the sequential equilibrium of the trade liberalization game (σ_t^*, ρ_t^*, θ_t) we have the following proposition.

PROPOSITION: Even in a hegemonic declining age, when a hegemon can no longer firmly commit itself to a free trade system, if the hegemon's reputation for its trade liberalization policies have already been established sufficiently ($\theta_t > (1/2)^{T-t}$ for the hegemon and $\theta_t > (1/2)^{T-t+1}$ for the non-hegemon), the hegemon and the non-hegemon keep their markets open ($\sigma_t^* = 1$ and $\rho_t^* = 1$), allowing the free trade system to be maintained. The precondition here is that the hegemon continues to display leadership by opening its market as long as it has

a will to maintain the free trade system.

According to the proposition, if the hegemon does not have its reputation for trade liberalization polices sufficiently established ($\theta_t > (1/2)^{T-t}$ for the hegemon and $\theta_t > (1/2)^{T-t+1}$ for the non-hegemon), neither does the hegemon always show leadership, nor does the non-hegemon always open its markets. Then the effectiveness of the international regime of trade liberalization declines, causing the free trade system to collapse.

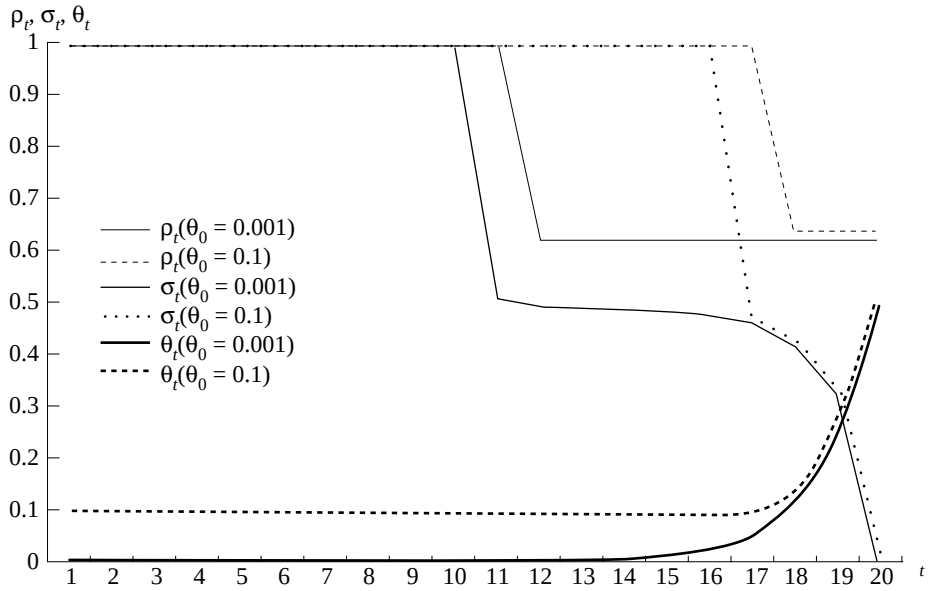

FIGURE 3. Sequential Extensions of the Game

FIGURE 3 represents two cases for sequential equilibrium of the trade liberalization game. Here, the hegemon will maintain the hegemonic system through twenty periods ($T = 20$) in two cases, with its initial reputation for trade liberalization policies set at 0.1% ($\theta_0 = 0.001$) in the first case and 10% ($\theta_0 = 0.1$) in the second case. As for the discount factors in the two cases, $\delta_H = \delta_N = 1$.

The extension of the game is divided into three phases in the two cases. The first phase of hegemonic decline, comprising from date 1 to date 10 in the case of $\theta_0 = 0.001$ (from date 1 to date 16 in the case of $\theta_0 = 0.1$), is defined as the time of stability for the free trade system. In this phase the inward-looking hegemon displays leadership in trade liberalization ($\sigma_t^* = 1$), with cooperation from the non-hegemon in opening its markets ($\rho_t^* = 1$), enabling the free trade system to be maintained. The bigger the initial reputation is, the longer the duration of the stable free trade system is. At this time the hegemon's reputation for the trade liberalization policies θ_t does not change at the initial level.

The second phase, including from date 11 to date 19 in the case of $\theta_0 = 0.001$ (from date 17 to date 19 in the case of $\theta_0 = 0.1$), is the time of instability for the free trade system when the behavior strategies are observed on both the hegemon's and non-hegemon's sides. At this time the hegemon's reputation for the trade liberalization policies θ_t rises from 0.1% to 25% in the case of $\theta_0 = 0.001$ (from 10% to 25% in the case of $\theta_0 = 0.1$) as long as the hegemon keeps its market open. The third phase coincides with the date 20 in the two cases, or the terminal date that is the time for the free trade system to collapse. The hegemon, in this phase, closes its market ($\sigma_{20}^* = 0$), letting the free trade system collapse.

5. Conclusions

We have considered the hegemon's trade liberalization policies in a hegemonic declining age from a viewpoint of asymmetric information and trade power between the hegemon and the non-hegemon. We summarize the conclusions as follows.

First, we constructed a trade liberalization model under hegemonic cooperation. This model is an extension of the existing theory of hegemonic stability, and explains the conditions under which the international regime of trade liberalization works effectively. Our model is also an extension of the strategic trade theory, which has been developed after Brander and Spencer, by using a dynamic game. The model is characterized first by the trade theory in imperfect competition being used to specify the political objectives or payoff functions, and second by the finitely repeated game with incomplete information. Furthermore, we considered the problems inherent in the theory of hegemonic stability as identified by Gilpin (1987), including the issues of ideology, domestic factors, role of market and technology development.

Second, we considered the hegemon's reputation for its trade liberalization policy and obtained a different finding from the existing theory of hegemonic stability. Even in a hegemonic declining age when a hegemon cannot firmly commit itself to a free trade system, if the hegemon has a sufficiently high reputation for its trade liberalization policies, the hegemon's leadership combined with cooperation provided by the non-hegemon enables the free trade system to stabilize. However, if the reputation of the hegemon has not been established firmly enough, the free trade system would collapse.

The finding is also different from the conclusions reached by the strategic trade theory through static analysis. The theory proves that free trade is not always optimal. Using the fundamentally same model as the strategic trade theory, we can explain the conditions for a trade liberalization policy to be optimal with additional consideration for a dynamic aspect of the game. Moreover, if the fundamental characteristic of unilateralism or result-oriented trade policy is found in a strategy of reciprocity, the policy is not always inconsistent with maintenance of the free trade system.

Third, analyzing the sequential equilibrium of the game, we clarified the three phases of the free trade system in a hegemonic declining age. The first phase is the time of stability for the

free trade system. In this phase, both the hegemon and non-hegemon open their markets and the free trade system is stably maintained. The second phase is defined as the time of instability for the free trade system. Here, the hegemon and non-hegemon play behavior strategies. The hegemon's reputation for trade liberalization is enhanced as long as it keeps the market open. The third phase is defined as the terminal date during which the hegemon closes the market causing the free trade system to collapse.

Finally, we conclude this paper by pointing out a future problem. The problem here is identical to what has always been pointed out as the limit of international analysis (Ikenberry, Lake and Mastanduno, 1988). In this paper, we have explicitly discussed trade policy preferences of economic actors. However, what is left undiscussed here is the political process in a nation to translate those preferences of the economic actors into national policy decisions. This coincides with a problem in the domestic level game of the two-level games presented by Putnam (1988) and the extension of Brander and Spencer's model indicated by Krugman (1990). Changes in trade policies affect consumer surplus and firm's profits in a nation. Therefore, each economic actor is expected to lobby and politically pressure the government into passing a kind of trade policy from which it can benefit. In this paper, however, we do not analyze such political processes. We just assume that a government, with consideration of economic effects and political costs of trade policy change on economic actors, makes policy decisions to maximize its payoff. We need to examine this point as a future problem.

Appendix

The Effects of Increased Non-tariff Barriers

The effects of own one-sided increased non-tariff barrier on payoff in each country are obtained as follows:

$$\partial U_H/\partial c_{NH} = \begin{cases} < 0, & \text{if } c_{NH} < c_{HH}, \\ < 0, & \text{if } c_{NH} > c_{HH}, \text{ and } \partial\mu / \partial c_{NH} \text{ is sufficiently large,} \\ > 0, & \text{if } c_{NH} > c_{HH}, \text{ and } \partial\mu / \partial c_{NH} \text{ is sufficiently small.} \end{cases} \tag{A1}$$

$$\partial U_N/\partial c_{HN} = \begin{cases} < 0, & \text{if } c_{HN} < c_{NN}, \\ < 0, & \text{if } c_{HN} > c_{NN}, \text{ and } \partial\eta / \partial c_{HN} \text{ is sufficiently large,} \\ > 0, & \text{if } c_{HN} > c_{NN}, \text{ and } \partial\eta / \partial c_{HN} \text{ is sufficiently small.} \end{cases} \tag{A2}$$

When both countries increase non-tariff barriers, the effects on each country's payoff are obtained as follows.

$$\partial U_H/\partial c_{NH} + \partial U_H/\partial c_{HN} = \begin{cases} < 0, & \text{if } c_{NH} < c_{HH}, \\ < 0, & \text{if } c_{NH} > c_{HH}, \text{ and } \partial\mu / \partial c_{NH} \text{ is sufficiently large}, \\ \gtrless 0, & \text{if } c_{NH} > c_{HH}, \text{ and } \partial\mu / \partial c_{NH} \text{ is sufficiently small.} \end{cases} \quad \text{(A3)}$$

$$\partial U_N/\partial c_{HN} + \partial U_N/\partial c_{NH} = \begin{cases} < 0, & \text{if } c_{HN} < c_{NN}, \\ < 0, & \text{if } c_{HN} > c_{NN}, \text{ and } \partial\eta / \partial c_{HN} \text{ is sufficiently large}, \\ \gtrless 0, & \text{if } c_{HN} > c_{NN}, \text{ and } \partial\eta / \partial c_{HN} \text{ is sufficiently small.} \end{cases} \quad \text{(A4)}$$

Strategy at date *T*-1

We will explain the strategy at date *T*-1. Strategies from *T*-2 onward can be obtained similarly. At date *T*-1 the hegemon decides its current strategy, σ_{T-1}^*, considering the reputation at date *T*, θ_T. It determines the strategy, σ_{T-1}^*, to maximize the expected payoff from date *T*-1 onward, $\Pi_H(T\text{-}1,\theta_{T-1})$.

$$\sigma_{T-1}^* = \arg\max\, [V_H(T,\theta_T)\text{-}26.5]\, \sigma_{T-1}^* + 4\rho_{T-1} + 48. \quad \text{(A5)}$$

The hegemon's reputation at date *T* is obtained by (1)'. From (A5) the hegemon's best response functions are as follows:

$$\sigma_{T-1}^* = \begin{cases} 1, & \text{if } \theta_T > 1/2 \text{ and } V_H(T, \theta_T) = 28, \\ [0,1] & \text{if } \theta_T = 1/2 \text{ and } V_H(T, \theta_T) = 26.5, \\ 0, & \text{if } \theta_T < 1/2 \text{ and } V_H(T, \theta_T) = 24. \end{cases} \quad \text{(A6)}$$

As for the hegemon's strategy at date *T*-1, σ_{T-1}^*, and its reputation, θ_T, it follows from (A6) and (1)' that

$$\sigma_{T-1}^* = \begin{cases} 1, & \theta_T = \theta_{T-1}, & \text{if } \theta_{T-1} > 1/2, \\ 1, & \theta_T = 1/2, & \text{if } \theta_{T-1} = 1/2, \\ \theta_{T-1}/(1\text{-}\theta_{T-1}) & \theta_T = 1/2, & \text{if } \theta_{T-1} < 1/2. \end{cases} \quad \text{(A7)}$$

Therefore, if the hegemon's reputation is sufficiently established at date *T*-1($\theta_{T-1} \geqq 1/2$), it opens the market and obtains the reputation at the terminal date θ_T ($\theta_T = \theta_{T-1}$, if $\theta_{T-1} > 1/2$ and $\theta_T = 1/2$, if $\theta_{T-1} = 1/2$). If the hegemon does not have such sufficient reputation ($\theta_{T-1} < 1/2$), it plays the local strategy or $\sigma_{T-1}^* = \theta_{T-1}/(1 - \theta_{T-1})$. At the terminal date *T*, it gets the reputation: $\theta_T = 1/2$.

The non-hegemon decides its strategy, ρ_{T-1}^*, to maximize the expected payoff from date *T*-1 onward, $\Pi_N(T\text{-}1,\theta_{T-1})$.

$$\rho_{T-1}^* = \arg\max\, [\tau_{T-1} - (1/2)]\, \rho_{T-1}^* - 19\tau_{T-1} + 44 + \tau_{T-1}V_N(T,\theta_T). \quad \text{(A8)}$$

where τ_{T-1} is given by (13). As for the non-hegemon's best response functions it follows from (A8) that

$$\rho^*_{T-1} = \begin{cases} 1, & \text{if } \tau_{T-1} > 1/2, \\ 5/8, & \text{if } \tau_{T-1} = 1/2, \\ 0, & \text{if } \tau_{T-1} < 1/2. \end{cases} \tag{A9}$$

From (A7), we obtain

$$\tau_{T-1}{}^* = \begin{cases} 1, & \text{if } \theta_{T-1} \geqq 1/2 \text{ and } \sigma_{T-1}{}^* = 1, \\ 2\theta_{T-1}, & \text{if } \theta_{T-1} < 1/2 \text{ and } \sigma_{T-1}{}^* = \theta_{t-1}/(1-\theta_{t-1}). \end{cases} \tag{A10}$$

Therefore, from (A9) and (A10) the non-hegemon's strategy at date T-1 is:

$$\rho_{T-1}{}^* = \begin{cases} 1, & \text{if } \theta_{T-1} > (1/2)^2, \quad \tau_{T-1}, > 1/2, \\ 5/8, & \text{if } \theta_{T-1} = (1/2)^2, \quad \tau_{T-1}, = 1/2, \\ 0, & \text{if } \theta_{T-1} < (1/2)^2, \quad \tau_{T-1}, < 1/2. \end{cases} \tag{A11}$$

If the hegemon has a sufficiently established reputation at date T-1($\theta_{T-1} \geqq (1/2)^2$), the non-hegemon opens the market ($\rho_{T-1}{}^* = 1$) and cooperates with the hegemon in maintaining the free trade system. If the hegemon does not have such a high reputation ($\theta_{T-1} < (1/2)^2$), it closes the market ($\rho_{T-1}{}^* = 0$). Furthermore, if the hegemon's reputation is $\theta_{T-1} = 1/2$, it opts for the local strategy ($\rho_{T-1}{}^* = 5/8$).

The Hegemon's Behavior Strategy and Its Reputation

The hegemon's behavior strategy (19) and its reputation (21) are derived in the following way. Using (A7), the reputation of the hegemon at date T, θ_T, provided that it takes behavior strategies $\sigma_{T-1}{}^*$, can be written as

$$\theta_T = \theta_{T-1} / [\theta_{T-1} + (1-\theta_{T-1})\ \sigma_{T-1}{}^*] = 1/2. \tag{A12}$$

Similarly, if the hegemon plays behavior strategies at date T-2, the reputation at date T-1 is

$$\theta_{T-1} = \theta_{T-2} / [\theta_{T-2} + (1-\theta_{T-2})\sigma_{T-2}{}^*] = (1/2)^2. \tag{A13}$$

Using the same inference, the condition for the hegemon to take behavior strategies at date t is obtained as follows:

$$\theta_t / [\theta_t + (1-\theta_t)\sigma_t{}^*] = (1/2)^{T-t}. \tag{A14}$$

Rearranging (A14) yields

$$\sigma_t^* = [\theta_t / (1 - \theta_t)][1 - (1/2)^{T-t}] / (1/2)^{T-t}. \quad \text{(A15)}$$

Substituting (A15) into (1)' yields

$$\theta_t = (1/2)^{T-t+1}. \quad \text{(A16)}$$

Finally, substituting (A16) into (A15), we obtain the behavior strategies of the hegemon at date *t*:

$$\sigma_t^* = [(1/2) - (1/2)^{T-t+1}] / [1 - (1/2)^{T-t+1}]. \quad \text{(A17)}$$

REFERENCES

Alt, J. E., Calvert, R. and B. Humes (1988), "Reputation and Hegemonic Stability: A Game-theoretic Analysis," *American Political Science Review*, 82, pp. 445-466.

Bhagwati, J. N. and H. T. Patric, eds. (1990), *Aggressive Unilateralism: America's 301 Trade Policy and the World Trading System*, Ann Arbor: The University of Michigan Press.

Brander, J. and B. Spencer (1985), "Export Subsidies and International Market Share Rivalry," *Journal of International Economics*, 18, pp. 83-100.

Calder, K. (1988), "Japanese Foreign Economic Policy Formation: Explaining the Reactive State," *World Politics*, 40, pp. 517-541.

Cohen, S. D. (1994), *The Making of United States International Economic Policy: Principle, Problems and Proposals for Reform*, 4th ed. Westport: Praeger.

Conybeare J. A. (1984), "Public Goods, Prisoner's Dilemmas and the International Political Economy," *International Studies Quarterly*, 28, pp. 5-22.

Conybeare J. A. (1988), *Trade Wars: The Theory and Practice of International Commercial Rivalry*, New York: Columbia University Press.

Cronshaw, M. B. and J. R. Markusen (1995), "The Theory and Consequences of Result-oriented Trade Policy," in J. Levinson, A. V. Deardorff and R. M. Stern (eds.), *New Directions in Trade Theory*, Ann Arbor: The University of Michigan Press, pp. 295-326.

Eichengreen, B. (1989), "Hegemonic Stability Theories of the International Monetary System," in R. Cooper, et al. (eds.), *Can Nations Agree? Issues in International Economic Cooperation*, Washington D.C.: The Brooking Institution, pp. 255-298.

Gilpin, R. (1975), *U.S. Power and the Multinational Corporation: The Political Economy of Foreign Direct Investment*, New York: Basic Books.

Gilpin, R. (1987), *The Political Economy of International Relations*, Princeton: Princeton University Press.

Goldstein, J. (1988), "Ideas, Institutions, and American Trade Policy," in J. G. Ikenberry, D. Lake and M. Mastanduno (eds.), *The State and American Foreign Economic Policy*, Ithaca: Cornell University Press, pp. 179-217.

Gowa, J. (1994), *Allies, Adversaries, and International Trade*, Princeton: Princeton University Press.

Helpman, E. and P. Krugman (1989), *Trade Policy and Market Structure*, Cambridge: MIT Press.

Ikenberry, J. G., Lake, D., and M. Mastanduno, eds. (1988), *The State and American Foreign Economic Policy*, Ithaca: Cornell University Press.

Ishiguro, K. (1995), "Hegemonic Reputation and International Cooperation," *The International Economy*, 46, pp. 41-56.

Jensen, R. and M. Thursby (1990), "Tariffs with Private Information and Reputation," *Journal of International Economics*, 29, pp. 43-67.

Keohane, R. O. (1984), *After Hegemony: Cooperation and Discord in the World Political Economy*, Princeton: Princeton University Press.

Kindleberger, C. P. (1973), *The World in Depression*, 1929-1939, Berkeley: University of California.

Krasner, S. R. (1976), "State Power and the Structure of International Trade," *World Politics*, 28, pp. 317-347.
Kreps, D. M. and R. Wilson (1982a), "Reputation and Imperfect Information," *Journal of Economic Theory*, 27, pp. 253-279.
Kreps, D. M. and R. Wilson (1982b), "Sequential Equilibria," *Econometrica*, 50, pp. 863-894.
Krugman, P. R. ed. (1984), *Strategic Trade Policy and New International Economics*, Cambridge: MIT Press.
Krugman, P. R. (1990), *Rethinking International Trade*, Cambridge: MIT Press.
Lake, D. (1988), *Power, Protection, and Free Trade: International Sources of U.S. Commercial Strategy, 1888-1939*, Ithaca: Cornell University Press.
Laussel, D. and C. Montet (1994), "Strategic Trade Policies," in D. Greenaway and L. A. Winters (eds.), *Surveys in International Trade*, Oxford: Blackwell, pp. 177-205.
Mansfield, E. D. and M. L. Busch (1995), "The Political Economy of Nontariff Barriers: A Cross-national Analysis," *International Organization*, 49, pp. 723-749.
Putnam, R. P. (1988), "Diplomacy and Domestic Politics: The Logic of Two-level Games," *International Organization*, 42, pp. 427-460.
Reizman, R. (1991), "Dynamic Tariffs with Asymmetric Information," *Journal of International Economics*, 30, pp. 267-283.
Snidal, D. (1985), "The Limits of Hegemonic Stability Theory," *International Organization*, 39, pp. 579-614.
Spencer, B. and J. Brander (1983), "International R & D Rivalry and Industrial Strategy," *Review of Economic Studies*, 50, pp. 707-722.
Stahl, D. O. and A. H. Turunen-Red (1995), "Tariff Games: Cooperation with Random Variation in Political Regimes," *European Journal of Political Economy*, 11, pp. 215-238.
Yarbrough, B. V. and R. M. Yarbrough (1992), *Cooperation and Governance in International Trade: The Strategic Organizational Approach*, Princeton: Princeton University Press.