Kobe University Repository : Kernel

PDF issue: 2025-12-05

On a relation between conway polynomials of (m, n)- and (n, m)-Turk's head links

Takemura, Atsushi

(Citation)
Journal of Knot Theory and Its Ramifications,25(14):1650082-1650082

(Issue Date)
2016-12

(Resource Type)
journal article

(Version)
Accepted Manuscript

(Rights)
©World Scientific Publishing. Electronic version of an article published as Journal of Knot Theory and Its Ramifications 25, 14, 2016, 1650082. DOI: 10.1142/S0218216516500826, http://www.worldscientific.com/worldscinet/rmp

(URL)
https://hdl.handle.net/20.500.14094/90003785

ON A RELATION BETWEEN CONWAY POLYNOMIALS OF (m,n)- AND (n,m)-TURK'S HEAD LINKS

ATSUSHI TAKEMURA

Abstract. The (m,n)-Turk's head link is presented by the alternating diagram which is obtained from the standard diagram of the (m,n)-torus link by crossing changes. In this paper, we show that for any integers $m \geq 1$ and $n = 2,3$, the coefficients of z^i in the Conway polynomials of the (m,n)- and (n,m)-Turk's head links coincide for $i \equiv 0,1 \pmod 4$ and differ by sign for $i \equiv 2,3 \pmod 4$. We conjecture that this property holds for any n.

1. Introduction

The (m,n)-Turk's head link is presented by the alternating diagram which is obtained from the standard diagram of the (m,n)-torus link by crossing changes. There are several studies on Turk's head links (cf. [3, 4, 6, 8]).

It is well-known that the (m,n)- and (n,m)-torus links have the same link type, and hence, their invariants are the same. However, the (m,n)- and (n,m)-Turk's head links have distinct link types ([8]) and their invariants are not the same generally.

The Jones polynomials $V_{TH(m,n)}$ and the Alexander polynomials $\Delta_{TH(m,n)}$ for $\{m,n\} = \{6,2\}$ and $\{5,3\}$ are calculated as follows.

$$\begin{cases} V_{TH(6,2)} = -t^{-\frac{7}{2}} + 3t^{-\frac{5}{2}} - 6t^{-\frac{3}{2}} + 9t^{-\frac{1}{2}} \\ \qquad\qquad -11t^{\frac{1}{2}} + 12t^{\frac{3}{2}} - 11t^{\frac{5}{2}} + 8t^{\frac{7}{2}} - 6t^{\frac{9}{2}} + 2t^{\frac{11}{2}} - t^{\frac{13}{2}}, \\ V_{TH(2,6)} = -t^{\frac{5}{2}} - t^{\frac{9}{2}} + t^{\frac{11}{2}} - t^{\frac{13}{2}} + t^{\frac{15}{2}} - t^{\frac{17}{2}}, \end{cases}$$

$$\begin{cases} V_{TH(5,3)} = t^{-6} - 6t^{-5} + 16t^{-4} - 30t^{-3} + 44t^{-2} - 54t^{-1} \\ \qquad\qquad +59 - 54t + 44t^2 - 30t^3 + 16t^4 - 6t^5 + t^6, \\ V_{TH(3,5)} = -t^{-5} + 5t^{-4} - 10t^{-3} + 15t^{-2} - 19t^{-1} \\ \qquad\qquad +21 - 19t + 15t^2 - 10t^3 + 5t^4 - t^5, \end{cases}$$

$$\begin{cases} \Delta_{TH(6,2)} = t^{-\frac{5}{2}} - 9t^{-\frac{3}{2}} + 25t^{-\frac{1}{2}} - 25t^{\frac{1}{2}} + 9t^{\frac{3}{2}} - t^{\frac{5}{2}}, \\ \Delta_{TH(2,6)} = t^{-\frac{5}{2}} - t^{-\frac{3}{2}} + t^{-\frac{1}{2}} - t^{\frac{1}{2}} + t^{\frac{3}{2}} - t^{\frac{5}{2}}, \end{cases}$$

$$\begin{cases} \Delta_{TH(5,3)} = t^{-4} - 10t^{-3} + 39t^{-2} - 80t^{-1} + 101 - 80t + 39t^2 - 10t^3 + t^4, \text{ and} \\ \Delta_{TH(3,5)} = t^{-4} - 6t^{-3} + 15t^{-2} - 24t^{-1} + 29 - 24t + 15t^2 - 6t^3 + t^4. \end{cases}$$

2010 *Mathematics Subject Classification.* Primary 57M25; Secondary 57M27.
Key words and phrases. Turk's head link, Conway polynomial, skein relation, braid.

The Jones polynomials of the (m,n)- and (n,m)-Turk's head links are quite different. Although the Alexander polynomials also look different, their Conway polynomials are similar as follows.

$$\begin{cases} \nabla_{TH(6,2)} = -3z + 4z^3 - z^5, \\ \nabla_{TH(2,6)} = -3z - 4z^3 - z^5, \end{cases}$$
$$\begin{cases} \nabla_{TH(5,3)} = 1 + 2z^2 - z^4 - 2z^6 + z^8, \text{ and} \\ \nabla_{TH(3,5)} = 1 - 2z^2 - z^4 + 2z^6 + z^8. \end{cases}$$

We observe that the coefficients of z^i in $\nabla_{TH(m,n)}$ and $\nabla_{TH(n,m)}$ coincide or differ by sign. In addition, we calculate the Conway polynomials of Turk's head links for $n = 2, 3$ as follows.

$$\begin{cases} \nabla_{TH(3,2)} = 1 - z^2, \\ \nabla_{TH(2,3)} = 1 + z^2, \end{cases}$$
$$\begin{cases} \nabla_{TH(4,2)} = -2z + z^3, \\ \nabla_{TH(2,4)} = -2z - z^3, \end{cases}$$
$$\begin{cases} \nabla_{TH(5,2)} = 1 - 3z^2 + z^4, \\ \nabla_{TH(2,5)} = 1 + 3z^2 + z^4, \end{cases}$$
$$\begin{cases} \nabla_{TH(10,2)} = -5z + 20z^3 - 21z^5 + 8z^7 - z^9, \\ \nabla_{TH(2,10)} = -5z - 20z^3 - 21z^5 - 8z^7 - z^9, \end{cases}$$
$$\begin{cases} \nabla_{TH(4,3)} = 1 - z^2 - z^4 + z^6, \\ \nabla_{TH(3,4)} = 1 + z^2 - z^4 - z^6, \end{cases}$$
$$\begin{cases} \nabla_{TH(6,3)} = 4z^4 - 3z^8 + z^{10}, \\ \nabla_{TH(3,6)} = 4z^4 - 3z^8 - z^{10}, \end{cases}$$
$$\begin{cases} \nabla_{TH(10,3)} = 1 - 3z^2 - 6z^4 + 18z^6 + 11z^8 - 29z^{10} + 2z^{12} + 14z^{14} - 7z^{16} + z^{18}, \\ \nabla_{TH(3,10)} = 1 + 3z^2 - 6z^4 - 18z^6 + 11z^8 + 29z^{10} + 2z^{12} - 14z^{14} - 7z^{16} - z^{18}, \end{cases}$$
$$\nabla_{TH(2,2)} = -z, \text{ and}$$
$$\nabla_{TH(3,3)} = z^4.$$

Observing these equalities, we prove the following.

Theorem 1.1. *For any integers $m \geq 1$ and $n = 2, 3$, the Conway polynomials*

$$\nabla_{TH(m,n)}(z) = \sum_{i=0}^{\infty} a_i z^i \text{ and } \nabla_{TH(n,m)}(z) = \sum_{i=0}^{\infty} b_i z^i$$

of the (m,n)- and (n,m)-Turk's head links satisfy

$$\begin{cases} a_i = b_i & \text{for } i \equiv 0, 1 \pmod 4, \text{ and} \\ a_i = -b_i & \text{for } i \equiv 2, 3 \pmod 4. \end{cases}$$

This paper is organized as follows. In Section 2, we review braids, Turk's head links, and the Conway polynomial. In Sections 3 and 4, we prove Theorem 1.1 for $n = 2$ and $n = 3$, respectively. In Section 5, we give supporting computational evidence for the conjecture that Theorem 1.1 holds for any $n \geq 2$ by the program "knotGTK" ([9]), which is the Windows version of the program "KNOT" ([5]).

2. Definitions

A *braid* is a collection of n parallel strands such that adjacent strands are allowed to cross over or under one another (cf. [1, 2]). Two braids on the same number of strands can be composed by placing them end to end. The *braid group* on n strands has a presentation with generators $\sigma_1, \sigma_2, \ldots, \sigma_{n-1}$ and the relations

$$\sigma_i\sigma_{i+1}\sigma_i = \sigma_{i+1}\sigma_i\sigma_{i+1}, \text{ and } \sigma_i\sigma_j = \sigma_j\sigma_i \text{ for } |i-j| \geq 2.$$

Here σ_i is the braid as shown in Figure 1. In this paper every braid is oriented from top to bottom.

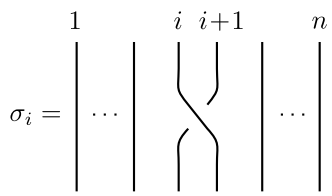

Figure 1

Given a braid α, the *closure* of α is the oriented link obtained by connecting the top and bottom of α simply as shown in Figure 2. We denote it by $Cl(\alpha)$.

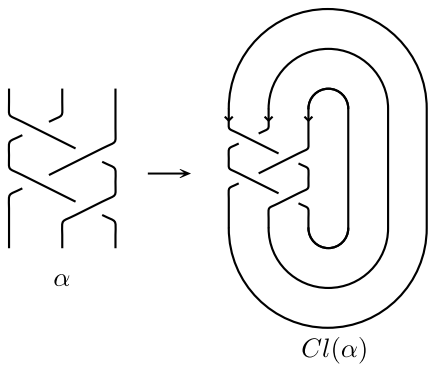

Figure 2

A *Markov move of type* 1 takes an n-strand braid to another n-strand braid via conjugation by σ_i for some $i \in \{1, 2, \ldots, n-1\}$. A *Markov move of type* 2 takes an n-strand braid to an $(n+1)$-strand braid by adding σ_n or σ_n^{-1} to the end. In other words, an n-strand braid α becomes $\alpha\sigma_n$ or $\alpha\sigma_n^{-1}$.

Theorem 2.1 ([7])**.** *The closures of two braids present the same knot or link if and only if one braid can be deformed into the other by a finite number of Markov moves or their inverses.* □

We denote by A_m and A_m^* the m-strand braids as shown in Figure 3.

Definition 2.2. For $m, n \geq 1$, the (m,n)-*Turk's head link* is the closure of the m-strand braid $(A_m)^n$. We denote it by $TH(m,n)$.

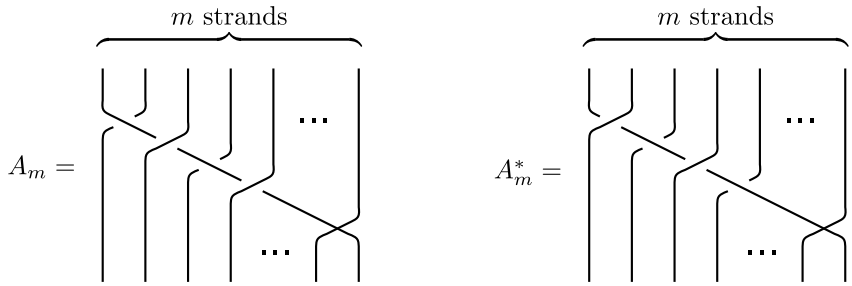

FIGURE 3

We remark that the number of components of $TH(m,n)$ is the greatest common divisor $\mathrm{GCD}(m,n)$.

The *Conway polynomial* $\nabla_L(z)$ of an oriented link L is a polynomial on z, which is computed by the following recursive formulas:

$$\begin{cases} \nabla_{L_+}(z) - \nabla_{L_-}(z) = z\nabla_{L_0}(z), \text{ and} \\ \nabla_{\bigcirc}(z) = 1, \end{cases}$$

where $\bigcirc$ is the trivial knot and (L_+, L_-, L_0) is a skein triple of oriented knots or links that are identical except in a crossing neighborhood where they look as in Figure 4. We often abbreviate $\nabla_L(z)$ to ∇_L.

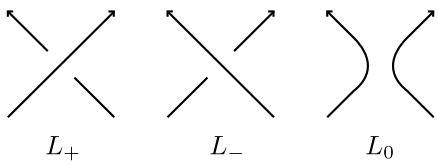

FIGURE 4

We denote by L^* the mirror image of a link L. The Conway polynomial ∇_{L^*} satisfies

$$\nabla_{L^*} = \begin{cases} \nabla_L & \text{if the number of components of } L \text{ is odd,} \\ -\nabla_L & \text{if the number of components of } L \text{ is even.} \end{cases}$$

3. The Conway polynomials of $TH(m,2)$ and $TH(2,m)$

In this section, we prove Theorem 1.1 for $n = 2$.

Lemma 3.1. *The Conway polynomial of $TH(m,2)$ satisfies*

$$\begin{cases} \nabla_{TH(1,2)} = 1, \\ \nabla_{TH(2,2)} = -z, \text{ and} \\ \nabla_{TH(m,2)} = \nabla_{TH(m-2,2)} - (-1)^m z \nabla_{TH(m-1,2)} \ (m \geq 3). \end{cases}$$

Proof. Since $TH(1,2)$ is the trivial knot, we have $\nabla_{TH(1,2)} = 1$. By the skein relation, it holds that

$$\begin{aligned}\nabla_{TH(2,2)} &= \nabla_{Cl(\sigma_1\sigma_1)}\\ &= \nabla_{Cl(\sigma_1^{-1}\sigma_1)} - z\nabla_{Cl(\sigma_1)}\\ &= -z.\end{aligned}$$

By the skein relation as shown in Figure 5, where a crossing in the skein relation is marked by a dot, we have

$$\nabla_{TH(m,2)} = \nabla_{TH(m-2,2)} - z\nabla_{TH^*(m-1,2)}$$

for $m \geq 3$. Since the number of components of $TH(m-1,2)$ is $\mathrm{GCD}(m-1,2)$, we have

$$\nabla_{TH^*(m-1,2)} = (-1)^m \nabla_{TH(m-1,2)}.$$

□

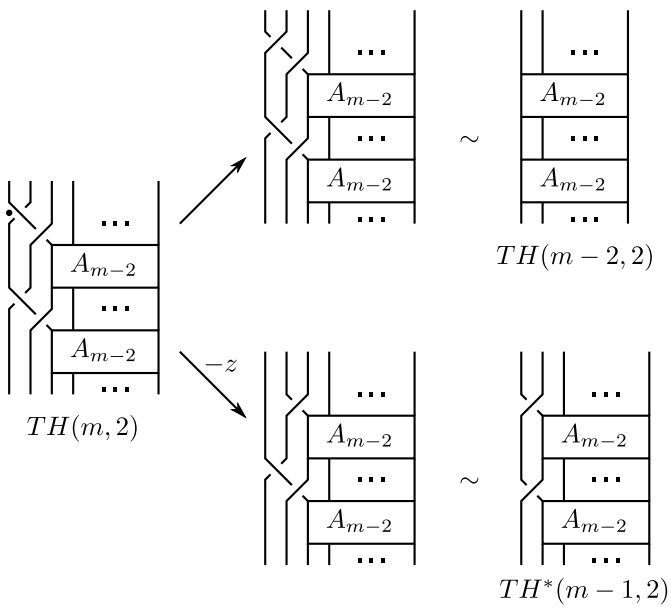

FIGURE 5

Lemma 3.2. *The Conway polynomial of $TH(2,m)$ satisfies*

$$\begin{cases}\nabla_{TH(2,1)} = 1,\\ \nabla_{TH(2,2)} = -z, \text{ and}\\ \nabla_{TH(2,m)} = \nabla_{TH(2,m-2)} - z\nabla_{TH(2,m-1)} \ (m \geq 3).\end{cases}$$

Proof. Since $TH(2,1)$ is the trivial knot, we have $\nabla_{TH(2,1)} = 1$. The second equation is given in Lemma 3.1. For $m \geq 3$, we have

$$\begin{aligned}\nabla_{TH(2,m)} =& \nabla_{Cl(\sigma_1^m)}\\ =& \nabla_{Cl(\sigma_1^{m-2})} - z\nabla_{Cl(\sigma_1^{m-1})}\\ =& \nabla_{TH(2,m-2)} - z\nabla_{TH(2,m-1)}.\end{aligned}$$

□

Theorem 3.3. *For any integer $m \geq 1$, the Conway polynomials*

$$\nabla_{TH(m,2)} = \sum_{i=0}^{\infty} a_i z^i \text{ and } \nabla_{TH(2,m)} = \sum_{i=0}^{\infty} b_i z^i$$

satisfy

$$\begin{cases} a_i = b_i & \text{for } i \equiv 0, 1 \pmod 4, \text{ and} \\ a_i = -b_i & \text{for } i \equiv 2, 3 \pmod 4. \end{cases}$$

Proof. We prove the theorem by induction on m. For $m = 1$, we have

$$\nabla_{TH(1,2)} = \nabla_{TH(2,1)} = 1.$$

Hence it holds that $a_0 = b_0 = 1$ and $a_i = b_i = 0$ for $i \geq 1$. For $m = 2$, we have

$$\nabla_{TH(2,2)} = -z.$$

Hence it holds that $a_1 = b_1 = -1$ and $a_i = b_i = 0$ for $i \neq 1$.

Assume that the theorem holds for $m = k-2$ and $k-1$ with $k \geq 3$. In other words, there are polynomials f_i and $g_i \in \mathbb{Z}[z^4]$ $(i = 0, 1, 2, 3)$ such that

$$\begin{cases} \nabla_{TH(k-2,2)} = f_0 + zf_1 + z^2 f_2 + z^3 f_3, \\ \nabla_{TH(2,k-2)} = f_0 + zf_1 - z^2 f_2 - z^3 f_3, \\ \nabla_{TH(k-1,2)} = g_0 + zg_1 + z^2 g_2 + z^3 g_3, \text{ and} \\ \nabla_{TH(2,k-1)} = g_0 + zg_1 - z^2 g_2 - z^3 g_3. \end{cases}$$

By Lemmas 3.1 and 3.2, we have

$$\begin{cases} \nabla_{TH(k,2)} = \nabla_{TH(k-2,2)} - (-1)^k z \nabla_{TH(k-1,2)} \\ \qquad\qquad = (f_0 + (-1)^{k-1} z^4 g_3) + z(f_1 + (-1)^{k-1} g_0) \\ \qquad\qquad + z^2(f_2 + (-1)^{k-1} g_1) + z^3(f_3 + (-1)^{k-1} g_2), \text{ and} \\ \nabla_{TH(2,k)} = \nabla_{TH(2,k-2)} - z\nabla_{TH(2,k-1)} \\ \qquad\qquad = (f_0 + z^4 g_3) + z(f_1 - g_0) - z^2(f_2 + g_1) - z^3(f_3 - g_2). \end{cases}$$

(i) Assume that k is odd. The number of components of $TH(k-2, 2)$ and $TH(k-1, 2)$ are one and two, respectively. Hence we have

$$\begin{cases} f_1 = f_3 = g_0 = g_2 = 0, \\ \nabla_{TH(k,2)} = (f_0 + z^4 g_3) + z^2(f_2 + g_1), \text{ and} \\ \nabla_{TH(2,k)} = (f_0 + z^4 g_3) - z^2(f_2 + g_1). \end{cases}$$

Therefore the theorem holds for $m = k$.

(ii) Assume that k is even. The number of components of $TH(k-2,2)$ and $TH(k-1,2)$ are two and one, respectively. Hence we have

$$\begin{cases} f_0 = f_2 = g_1 = g_3 = 0, \\ \nabla_{TH(k,2)} = z(f_1 - g_0) + z^3(f_3 - g_2), \text{ and} \\ \nabla_{TH(2,k)} = z(f_1 - g_0) - z^3(f_3 - g_2). \end{cases}$$

Therefore the theorem holds for $m = k$. □

4. The Conway polynomials of $TH(m,3)$ and $TH(3,m)$

In this section, we prove Theorem 1.1 for $n = 3$.

Lemma 4.1. *The Conway polynomial of $TH(m,3)$ satisfies*

$$\begin{cases} \nabla_{TH(1,3)} = 1, \\ \nabla_{TH(2,3)} = 1 + z^2, \text{ and} \\ \nabla_{TH(m,3)} = (-1+z^2)\nabla_{TH(m-1,3)} - \nabla_{TH(m-2,3)} + 2 \ (m \geq 3). \end{cases}$$

Proof. Since $TH(1,3)$ is the trivial knot, we have $\nabla_{TH(1,3)} = 1$. By the skein relation, it holds that

$$\begin{aligned} \nabla_{TH(2,3)} &= \nabla_{Cl(\sigma_1^3)} \\ &= \nabla_{Cl(\sigma_1)} - z\nabla_{Cl(\sigma_1^2)} \\ &= 1 + z^2. \end{aligned}$$

For $m = 3$, we have

$$\begin{aligned} \nabla_{TH(3,3)} &= \nabla_{\text{a split link}} - z(\nabla_{TH(2,2)} + z\nabla_{TH(3,2)}) \\ &= -z(-z + z(\nabla_{\bigcirc} + z\nabla_{TH(2,2)})) \\ &= z^2 - z^2 + z^4 \\ &= z^4 \end{aligned}$$

as shown in Figure 6. Then it holds that

$$\begin{aligned} (-1+z^2)\nabla_{TH(2,3)} - \nabla_{TH(1,3)} + 2 =& (-1+z^2)(1+z^2) - 1 + 2 \\ =& -1 + z^4 - 1 + 2 \\ =& z^4 \\ =& \nabla_{TH(3,3)}. \end{aligned}$$

Let $P(m)$ be the link $Cl(\sigma_1^{-1}A_m^3)$. By the skein relations as shown in Figures 7 and 8, we have

$$\begin{cases} \nabla_{TH(m,3)} = \nabla_{TH^*(m-3,3)} + z\nabla_{P(m-2)} - z\nabla_{P(m)} \text{ for } m \geq 4, \text{ and} \\ \nabla_{P(m)} = \nabla_{P^*(m-1)} - z\nabla_{TH^*(m-1,3)} \text{ for } m \geq 3. \end{cases}$$

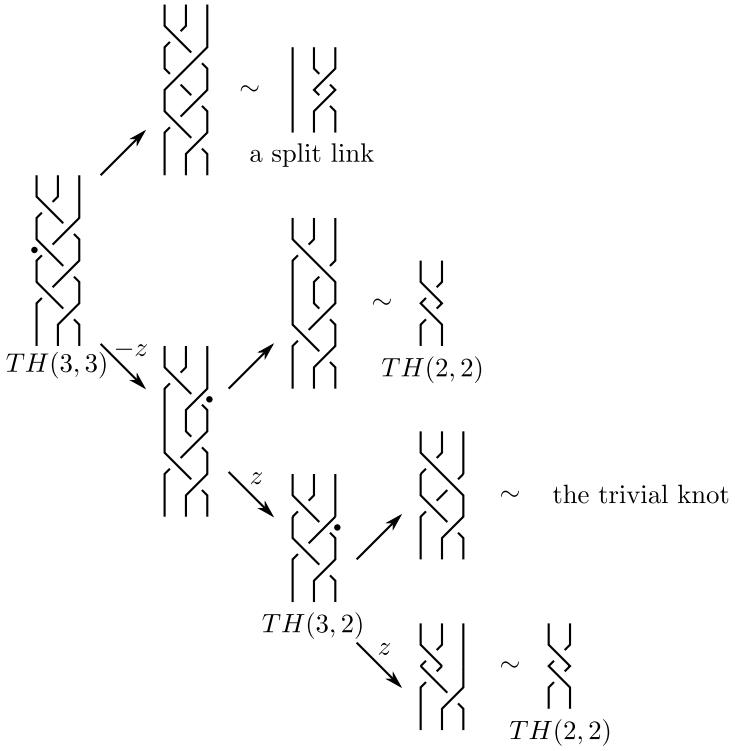

FIGURE 6

We remark that the numbers of components of $TH(m,3)$ and $P(m)$ are odd and even, respectively. Then it holds that

$$\begin{aligned}
\nabla_{TH(m,3)} =& \nabla_{TH^*(m-3,3)} + z\nabla_{P(m-2)} - z\nabla_{P(m)} \\
=& \nabla_{TH^*(m-3,3)} + z\nabla_{P(m-2)} - z\big(\nabla_{P^*(m-1)} - z\nabla_{TH^*(m-1,3)}\big) \\
=& \nabla_{TH^*(m-3,3)} + z\nabla_{P(m-2)} \\
& - z\big((-\nabla_{P^*(m-2)} + z\nabla_{TH^*(m-2,3)}\big) - z\nabla_{TH^*(m-1,3)}\big) \\
=& \nabla_{TH^*(m-3,3)} + z\nabla_{P(m-2)} \\
& + z\nabla_{P^*(m-2)} - z^2\nabla_{TH^*(m-2,3)} + z^2\nabla_{TH^*(m-1,3)} \\
=& \nabla_{TH(m-3,3)} + z\nabla_{P(m-2)} \\
& - z\nabla_{P(m-2)} - z^2\nabla_{TH(m-2,3)} + z^2\nabla_{TH(m-1,3)} \\
=& \nabla_{TH(m-3,3)} - z^2\nabla_{TH(m-2,3)} + z^2\nabla_{TH(m-1,3)}.
\end{aligned}$$

Hence we have

$$\begin{aligned}\nabla_{TH(m,3)} + (1-z^2)\nabla_{TH(m-1,3)} + \nabla_{TH(m-2,3)} \\ &= \nabla_{TH(m-1,3)} + (1-z^2)\nabla_{TH(m-2,3)} + \nabla_{TH(m-3,3)} \\ &= \nabla_{TH(m-2,3)} + (1-z^2)\nabla_{TH(m-3,3)} + \nabla_{TH(m-4,3)} \\ &= \nabla_{TH(3,3)} + (1-z^2)\nabla_{TH(2,3)} + \nabla_{TH(1,3)}.\end{aligned}$$

Then we have

$$\begin{aligned}\nabla_{TH(m,3)} + (1-z^2)\nabla_{TH(m-1,3)} + \nabla_{TH(m-2,3)} \\ &= \nabla_{TH(3,3)} + (1-z^2)\nabla_{TH(2,3)} + \nabla_{TH(1,3)} \\ &= z^4 + (1-z^2)(1+z^2) + 1 \\ &= 2.\end{aligned}$$

□

Lemma 4.2. *The Conway polynomial of $TH(3,m)$ satisfies*

$$\begin{cases} \nabla_{TH(3,1)} = 1, \\ \nabla_{TH(3,2)} = 1 - z^2, \text{ and} \\ \nabla_{TH(3,m)} = (-1-z^2)\nabla_{TH(3,m-1)} - \nabla_{TH(3,m-2)} + 2 \ (m \geq 3). \end{cases}$$

Proof. Since $TH(3,1)$ is the trivial knot, we have $\nabla_{TH(3,1)} = 1$. By the skein relation as shown in a lower part of Figure 6, it holds that

$$\begin{aligned}\nabla_{TH(3,2)} &= \nabla_{\bigcirc} + z\nabla_{TH(2,2)} \\ &= 1 - z^2.\end{aligned}$$

For $m = 3$, it holds that

$$\begin{aligned}(-1-z^2)\nabla_{TH(3,2)} - \nabla_{TH(3,1)} + 2 =& (-1-z^2)(1-z^2) - 1 + 2 \\ =& z^4 \\ =& \nabla_{TH(3,3)}.\end{aligned}$$

Let $Q(m)$ and $R(m)$ be the links $Cl(\sigma_1\sigma_1\sigma_2 A_3^m)$ and $Cl(\sigma_1\sigma_1 A_3^m)$, respectively. By the skein relations as shown in Figures 9 and 10, we have

$$\begin{cases} \nabla_{TH(3,m)} = \nabla_{R(m-3)} + z(\nabla_{Q(m-2)} + z\nabla_{R(m-2)}) \\ \qquad\qquad = \nabla_{R(m-3)} + z\nabla_{Q(m-2)} + z^2\nabla_{R(m-2)}, \text{ and} \\ \nabla_{R(m)} = \nabla_{TH(3,m)} - z(\nabla_{Q(m-1)} + z\nabla_{R(m-1)}) \\ \qquad\qquad = \nabla_{TH(3,m)} - z\nabla_{Q(m-1)} - z^2\nabla_{R(m-1)} \end{cases}$$

for $m \geq 4$. By Figure 11, we have

$$\nabla_{Q(m)} = \nabla_{Q(m-2)} = \nabla_{TH(2,2)} = -z.$$

Then it holds that

$$\begin{cases} \nabla_{TH(3,m)} = \nabla_{R(m-3)} - z^2 + z^2\nabla_{R(m-2)} \text{ for } m \geq 4, \text{ and} \\ \nabla_{R(m)} = \nabla_{TH(3,m)} + z^2 - z^2\nabla_{R(m-1)} \text{ for } m \geq 2. \end{cases}$$

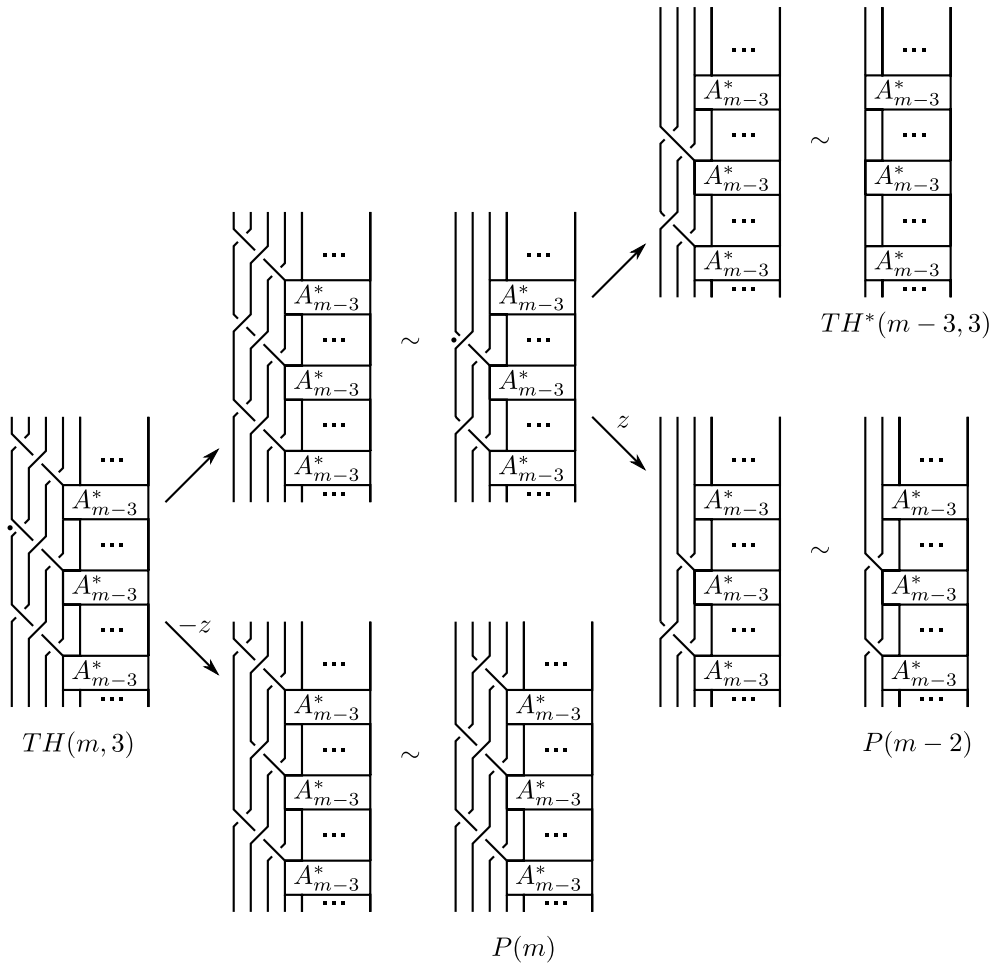

FIGURE 7

By these equations, we have

$$\begin{cases} \nabla_{R(m-2)} = \dfrac{1}{z^4-1}(z^2\nabla_{TH(3,m)} - \nabla_{TH(3,m-2)} + z^4 - z^2), \text{ and} \\ \nabla_{R(m-3)} = \dfrac{1}{z^4-1}(-\nabla_{TH(3,m)} + z^2\nabla_{TH(3,m-2)} + z^4 - z^2). \end{cases}$$

Therefore we obtain

$$z^2\nabla_{TH(3,m)} - \nabla_{TH(3,m-2)} = -\nabla_{TH(3,m+1)} + z^2\nabla_{TH(3,m-1)} \text{ for } m \geq 4$$

and hence

$$\begin{aligned} \nabla_{TH(3,m+1)} + (1+z^2)\nabla_{TH(3,m)} + \nabla_{TH(3,m-1)} \\ &= \nabla_{TH(3,m)} + (1+z^2)\nabla_{TH(3,m-1)} + \nabla_{TH(3,m-2)} \\ &= \nabla_{TH(3,3)} + (1+z^2)\nabla_{TH(3,2)} + \nabla_{TH(3,1)}. \end{aligned}$$

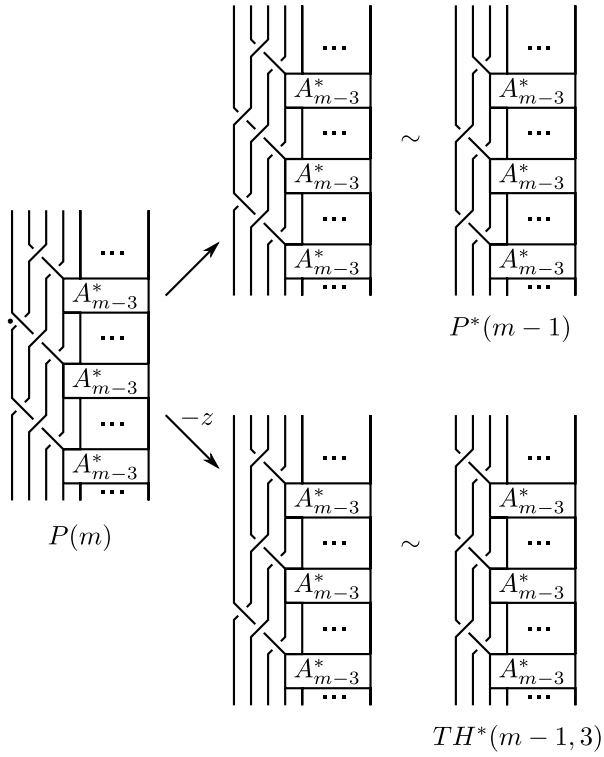

FIGURE 8

Then we have

$$\begin{aligned}\nabla_{TH(3,m)} + (1+z^2)\nabla_{TH(3,m-1)} + \nabla_{TH(3,m-2)} \\ &= \nabla_{TH(3,3)} + (1+z^2)\nabla_{TH(3,2)} + \nabla_{TH(3,1)} \\ &= z^4 + (1+z^2)(1-z^2) + 1 \\ &= 2.\end{aligned}$$

□

Theorem 4.3. *For any integer $m \geq 1$, the Conway polynomials*

$$\nabla_{TH(m,3)} = \sum_{i=0}^{\infty} a_i z^i \text{ and } \nabla_{TH(3,m)} = \sum_{i=0}^{\infty} b_i z^i$$

satisfy

$$\begin{cases} a_i = b_i & \text{for } i \equiv 0,1 \pmod 4, \text{ and} \\ a_i = -b_i & \text{for } i \equiv 2,3 \pmod 4. \end{cases}$$

Proof. We prove the theorem by induction on m. For $m = 1$, we have

$$\nabla_{TH(1,3)} = \nabla_{TH(3,1)} = 1.$$

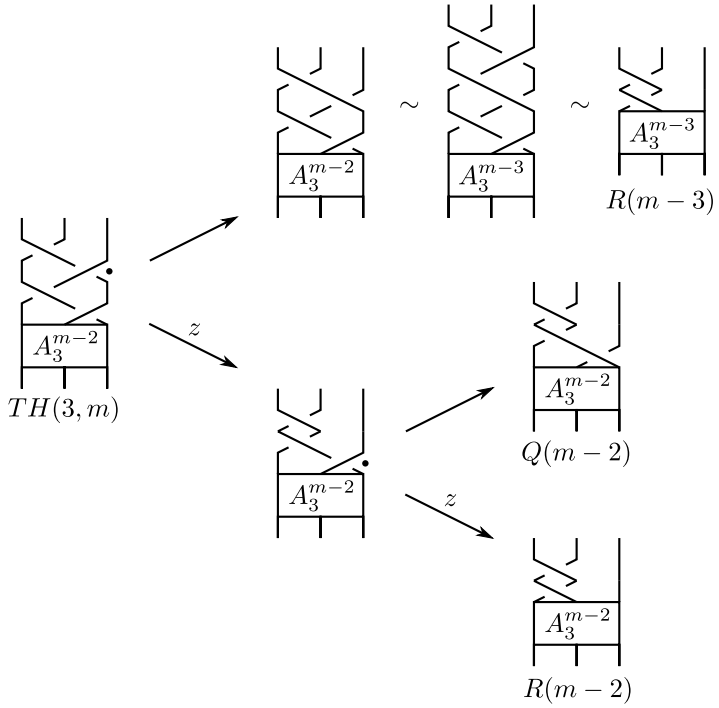

FIGURE 9

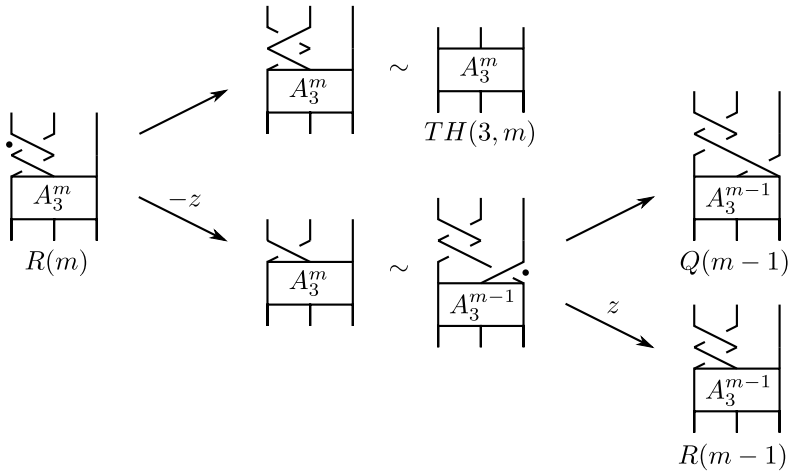

FIGURE 10

Hence it holds that $a_0 = b_0 = -1$ and $a_i = b_i = 0$ for $i \geq 1$. For $m = 2$, we have

$$\begin{cases} \nabla_{TH(2,3)} = 1 + z^2, \text{ and} \\ \nabla_{TH(3,2)} = 1 - z^2. \end{cases}$$

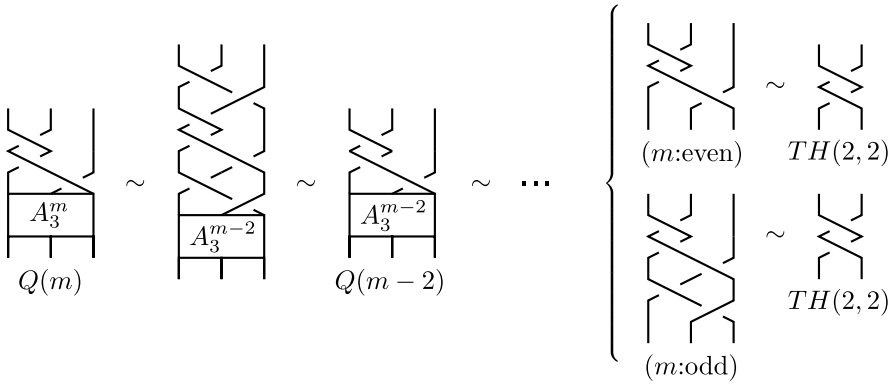

FIGURE 11

Hence it holds that $a_0 = b_0 = 1$, $a_2 = -b_2 = 1$ and $a_i = b_i = 0$ for $i \neq 0, 2$.

Assume that the theorem holds for $m = k-2$ and $k-1$ with $k \geq 3$. In other words, there are polynomials f_i and $g_i \in \mathbb{Z}[z^4]$ $(i = 0, 2)$ such that

$$\begin{cases} \nabla_{TH(k-2,3)} = f_0 + z^2 f_2, \\ \nabla_{TH(3,k-2)} = f_0 - z^2 f_2, \\ \nabla_{TH(k-1,3)} = g_0 + z^2 g_2, \text{ and} \\ \nabla_{TH(3,k-1)} = g_0 - z^2 g_2. \end{cases}$$

By Lemmas 4.1 and 4.2, we have

$$\begin{cases} \nabla_{TH(k,3)} = (-1+z^2)\nabla_{TH(k-1,3)} - \nabla_{TH(k-2,3)} + 2 \\ \qquad\qquad = (-f_0 - g_0 + z^4 g_2 + 2) + z^2(-f_2 + g_0 - g_2), \text{ and} \\ \nabla_{TH(3,k)} = (-1-z^2)\nabla_{TH(3,k-1)} - \nabla_{TH(3,k-2)} + 2 \\ \qquad\qquad = (-f_0 - g_0 + z^4 g_2 + 2) - z^2(-f_2 + g_0 - g_2). \end{cases}$$

Therefore the theorem holds for $m = k$. $\square$

5. Conjecture

By computer calculations, we have

$$\begin{cases} \nabla_{TH(4,5)} = 1 + 5z^2 + 6z^4 - 3z^6 - 6z^8 + z^{10} + z^{12}, \\ \nabla_{TH(5,4)} = 1 - 5z^2 + 6z^4 + 3z^6 - 6z^8 - z^{10} + z^{12}, \end{cases}$$

$$\begin{cases} \nabla_{TH(4,6)} = -6z - 5z^3 + 14z^5 + 11z^7 - 10z^9 - 7z^{11} + 2z^{13} + z^{15}, \\ \nabla_{TH(6,4)} = -6z + 5z^3 + 14z^5 - 11z^7 - 10z^9 + 7z^{11} + 2z^{13} - z^{15}, \end{cases}$$

$$\begin{cases} \nabla_{TH(5,7)} = 1 - 8z^2 - 2z^4 + 82z^6 + 57z^8 - 156z^{10} \\ \qquad\qquad -113z^{12} + 106z^{14} + 72z^{16} - 26z^{18} - 15z^{20} + 2z^{22} + z^{24}, \\ \nabla_{TH(7,5)} = 1 + 8z^2 - 2z^4 - 82z^6 + 57z^8 + 156z^{10} \\ \qquad\qquad -113z^{12} - 106z^{14} + 72z^{16} + 26z^{18} - 15z^{20} - 2z^{22} + z^{24}, \end{cases}$$

$$\nabla_{TH(4,4)} = -4z^5 + z^9,$$

$$\nabla_{TH(5,5)} = 25z^8 - 10z^{12} + z^{16}, \text{ and}$$

$$\nabla_{TH(6,6)} = -144z^9 + 232z^{13} - 105z^{17} + 18z^{21} - z^{25}.$$

By these equations, we conjecture the following.

Conjecture 5.1. *For any integers $m \geq 1$ and $n \geq 2$, the Conway polynomials*

$$\nabla_{TH(m,n)} = \sum_{i=0}^{\infty} a_i z^i \text{ and } \nabla_{TH(n,m)} = \sum_{i=0}^{\infty} b_i z^i$$

satisfy

$$\begin{cases} a_i = b_i & \text{for } i \equiv 0, 1 \pmod 4, \text{ and} \\ a_i = -b_i & \text{for } i \equiv 2, 3 \pmod 4. \end{cases}$$

References

[1] E. Artin, *Theory of Braids*, Ann. of Math. **48** (1947), no. 2, 101–126.

[2] J. S. Birman, *Braids, links and mapping class groups*, Annals of Mathematics Studies No. 82. Princeton University Press, Princeton, N.J.; University of Tokyo Press, Tokyo, 1974. ix+228 pp.

[3] M. E. Bozhüyük, *On three sheeted branched covering spaces of* $(3, 2)$*-Turk's head knot*, J. Fac. Sci. Karadeniz Tech. Univ. **3** (1980), 21–25.

[4] N. E. Dowdall, T. W. Mattman, K. Meek, and P. R. Solis, *On the Harary-Kauffman conjecture and Turk's head knots*, Kobe J. Math. **27** (2010), no. 1–2, 1–20.

[5] K. Kodama, `http://www.math.kobe-u.ac.jp/HOME/kodama/knot.html`

[6] P. Lopes and J. Matias, *Minimum number of colors: the Turk's head knots case study*, Discrete Math. Theor. Comput. Sci. **17** (2015), no. 2, 1–30.

[7] A. A. Markov, *Über die freie Äquivalenz der geschlossenen Zöpfe*, Recueil Math. Moscou **1** (1935), 73–78.

[8] Y. Nakanishi and M. Yamada, *On Turk's head knots*, Kobe J. Math. **17** (2000), no. 2, 119–130.

[9] T. Sumi, `http://www.artsci.kyushu-u.ac.jp/~sumi/C/knot/`

Department of Mathematics, Kobe University, Rokkodai-cho 1-1, Nada-ku, Kobe 657-0013, Japan

E-mail address: `atakemr@math.kobe-u.ac.jp`